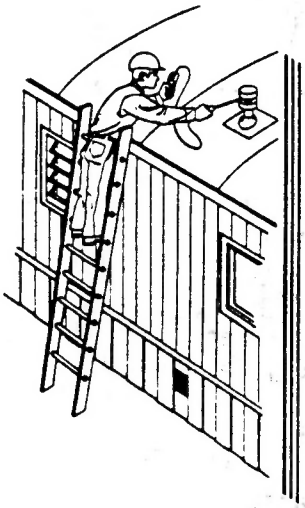

RECOMMENDED MOBILE HOME WEATHERIZATION INSTALLATION STANDARDS

written by

James E. O'Bannon
California State University, Chico

graphics by

Al Paulsen

and editorial support from

Andre Grieco

prepared for

U. S. Department of Energy
Weatherization Assistance Program

December 1993

RECOMMENDED
MOBILE HOME WEATHERIZATION
INSTALLATION STANDARDS

TABLE OF CONTENTS

TABLE OF CONTENTS i

INTRODUCTION iv

ACKNOWLEDGEMENTS v

ABBREVIATIONS vii

Section 1
COMBUSTION APPLIANCE SAFETY INSPECTION STANDARDS 1-1
Installation Criteria 1-3
Nonfeasibility Criteria 1-24

Section 2
BLOWER DOOR USE AND ENVELOPE SEALING STANDARDS . . 2-1
Installation Criteria 2-3
Nonfeasibility Criteria 2-19

Section 3
DUCT SYSTEM ANALYSIS AND REPAIR STANDARDS 3-1
Installation Criteria 3-2
Nonfeasibility Criteria 3-27

Section 4
CAULKING STANDARDS 4-1
Installation Criteria 4-3
Nonfeasibility Criteria 4-11

Section 5
WEATHERSTRIPPING STANDARDS 5-1
Installation Criteria 5-3
Nonfeasibility Criteria 5-13

TABLE OF CONTENTS

Section 6
GLASS REPLACEMENT STANDARDS 6-1
Installation Criteria 6-2
Nonfeasibility Criteria 6-7

Section 7
STORM WINDOW AND DOOR STANDARDS 7-1
Installation Criteria 7-2
Nonfeasibility Criteria 7-20

Section 8
EVAPORATIVE COOLER AND AIR CONDITIONER VENT COVER STANDARDS 8-1
Installation Criteria 8-2
Nonfeasibility Criteria 8-7

Section 9
WATER HEATER INSULATION STANDARDS 9-1
Installation Criteria 9-2
Nonfeasibility Criteria 9-16

Section 10
ELECTRICAL OUTLET AND SWITCH GASKET STANDARDS 10-1
Installation Criteria 10-2
Nonfeasibility Criteria 10-4

Section 11
LOW FLOW SHOWERHEAD STANDARDS 11-1
Installation Criteria 11-2
Nonfeasibility Criteria 11-4

Section 12
CEILING/ROOF INSULATION STANDARDS 12-1
Installation Criteria 12-4
Nonfeasibility Criteria 12-44

Section 13
UNDERCARRIAGE INSULATION STANDARDS 13-1
Installation Criteria 13-2
Nonfeasibility Criteria 13-16

TABLE OF CONTENTS

Section 14
WOOD BURNING SPACE HEATER STANDARDS 14-1
Installation Criteria 14-2
Nonfeasibility Criteria 14-13

Section 15
CENTRAL HVAC AND WALL/WINDOW AIR CONDITIONER
FILTER AND ALARM STANDARDS 15-1
Installation Criteria 15-2
Nonfeasibility Criteria 15-9

Appendix A
Economic Stop Policy A-1

Appendix B
Minimum Ventilation Requirement B-1

Appendix C
Combustion Air Requirements for Fuel Burning Appliances . C-1

INTRODUCTION

This document is intended to serve as a voluntary installation and inspection guide for state and local agencies participating in the U.S. Department of Energy's Weatherization Assistance Program.

Since the inception of the DOE program in 1976, quality of workmanship has been controlled by front end training of work crews and post inspections by crew leaders. The subjective nature of this approach to quality assurance has obvious shortcomings. Not all installers receive the same amount of training and not all training programs adequately address the correct techniques and procedures for the proper installation of basic weatherization measures. Additionally, what is taught is not always what is learned, and what is learned is not always what is practiced.

The installation and inspection guide addresses several of these shortcomings by providing uniform, objective, clearly written, and illustrated standards for the installation of measures. The standards serve as a benchmark for defining quality workmanship and as a tool for measuring quality performance. As such, this user-friendly guide can serve as a valuable resource to state and local agencies when defining critical/fail performance elements, when training workers, or when inspecting completed dwelling units.

In the preparation of the guide, numerous regulations, codes, standards, training manuals, and manufacturer's specifications were reviewed. The standards are intended to meet or exceed existing codes and regulations and conform to accepted building practices.

In some cases, however, more restrictive state or local building codes may apply, or a state or local agency may wish to implement more stringent standards to address unique building or climatic conditions. Users of the guide are encouraged to modify or amend the guide material to meet specific requirements or to address specific needs.

ACKNOWLEDGEMENTS

The author thanks the members of the weatherization community for their contribution to the contents of this publication.

Sincere appreciation is extended to the following individuals for their input.

Mr. Mark Burger
Mr. Chris Burns
Ms. Cyndia Crawford
Mr. Robert Grove
Mr. Dan Hartman
Ms. Vicky Hayes
Ms. Martha Hewett
Mr. Bill Ives
Mr. Don Michael Jones
Mr. Jon Jones
Mr. Paul A. Knight
Mr. Joe Lstiburek
Mr. John McBride
Mr. Ken McClendon
Mr. Jeffrey Morin
Mr. Gary Nelson
Mr. Kim Nesvig
Mr. F. L. Andrew Padian
Mr. Jeff Schlegel
Mr. Richard Shaw
Mr. Cal Steiner
Mr. Ken Tohinaka
Mr. Bill Van Der Meer
Ms. Barbara Wainger
Ms. Linda Wigington
Mr. Roger Williams
Ms. Magi York

Special thanks go to a six member technical review committee without whose detailed review this draft would not have been possible.

Robert DeSoto
Colorado Division of Housing
Denver, Colorado

Bill Hunt
Richard Heath & Associates
Fresno, California

Larry Kinney
Synertech Systems Corporation
Syracuse, New York

John Krigger
Saturn Resource Management
Helena, Montana

Dennis Miller
California Department of Economic Opportunity
Sacramento, California

Tom Wilson
Residential Energy Conservation Consulting Group
Fairchild, Wisconsin

ABBREVIATIONS

AAMA	American Architectural Manufacturers Association
ACDD	Annual Cooling Degree Days
AGA	American Gas Association
AHDD	Annual Heating Degree Days
ANSI	American National Standards Institute
ASME	American Society of Mechanical Engineers
ASTM	American Society for Testing and Materials
BOCA	Building Officials and Code Administrators
CABO	Council of American Building Officials
CFM_{50}	Cubic feet per minute of air flow at 50 pascals of pressure
CFR	Code of Federal Regulations
CO	Carbon Monoxide
CPSC	Consumer Products Safety Commission
FS	Federal Specifications
GE	General Electric
HCD	California Department of Housing and Community Development
HUD	U.S. Department of Housing and Urban Development
HUD MHCSS	HUD Manufactured Home Construction and Safety Standards
HVAC	Heating Ventilation and Air Conditioning
ICBO	International Conference of Building Officials
IWC	Inches of Water Column

NEC	National Electric Code
NEMA	National Electrical Manufacturers Association
NFPA	National Fire Protection Association
NWWDA	National Wood Window and Door Association
NFV	Net Free Venting
OC	On Center
PPM	Parts Per Million
PSI	Pounds Per Square Inch
P/T	Pressure and Temperature
SBCCI	Southern Building Code Congress International
UBC	Uniform Building Code
UI	United Inches
UL	Underwriters Laboratories
UMC	Uniform Mechanical Code
UPC	Uniform Plumbing Code
UV	Ultraviolet
WC	Water Column

SECTION 1

COMBUSTION APPLIANCE SAFETY INSPECTIONS

PREFACE

Examination of combustion appliances prior to the installation of Blower Door Driven Weatherization is essential. Reducing the amount of natural air change in a home by sealing sources of infiltration and exfiltration can jeopardize the health of the occupants, especially if the home contains a combustion appliance which is not operating safely. Consider, for example, a malfunctioning appliance which is introducing an unsafe level of carbon monoxide (CO) into the conditioned space. This type of hazard must be identified and corrected prior to reducing the amount of natural ventilation in the home by the installation of infiltration reduction measures. Infiltration reduction measures encompass all duct and shell sealing activities, including window and door replacements, cooler and air conditioner covers, and caulking and weatherstripping.

Because it is vital to protect indoor air quality, safety inspections must be performed on all combustion appliances present within the home and in adjacent locations. The goal is to identify and eliminate any hazardous conditions. The combustion appliance safety inspections are geared to detect such hazards as these:

- Gas leaks
- Excessive CO
- Inadequate draft
- Backdrafting and spillage of combustion products
- Rollout and other burner-related abnormalities
- Inadequate combustion air
- Improper, disconnected, or otherwise faulty flue and vent systems
- A cracked heat exchanger or other combustion chamber defect

Problems associated with combustion appliances must be corrected before infiltration reduction measures may be installed. With supervisor approval, the weatherization crew may be able to make routine minor repairs. However, more serious defects and most operational adjustments require a qualified technician or licensed contractor to perform the modifications necessary to make the system both safe and efficient.

The important first step in the weatherization sequence is to check the appliances for evidence of safety hazards. This section establishes the standards for conducting combustion appliance safety inspections.

This document is not a how-to manual. Therefore, in addition to familiarity with these standards, a working knowledge of combustion appliance safety inspection methods and equipment is required. It is vitally important to properly screen appliances for high CO, spillage, and inadequate draft. Thus, it is incumbent upon each weatherization technician charged with that responsibility to acquire the required training and experience.

SECTION 1

COMBUSTION APPLIANCE SAFETY INSPECTION STANDARDS

1. TEST EQUIPMENT AND ACCESSORIES
   - HVAC Safety Test Equipment
     - Carbon monoxide analyzers shall, at a minimum, measure CO levels from zero ppm to 999 ppm.
     - Draft gauges shall have a range of negative .25 to positive .05 inches of water, or negative 62.5 to positive 12.5 pascals.
     - Thermometers shall have a range from 0 to 250°F.
   - HVAC Safety Test Accessories
     - Vent pipe plug buttons, noncorrosive.
   - Maintenance
     - Test equipment shall be properly handled and maintained.
     - Data measuring instruments shall be calibrated, as needed, no less frequently than once per year.

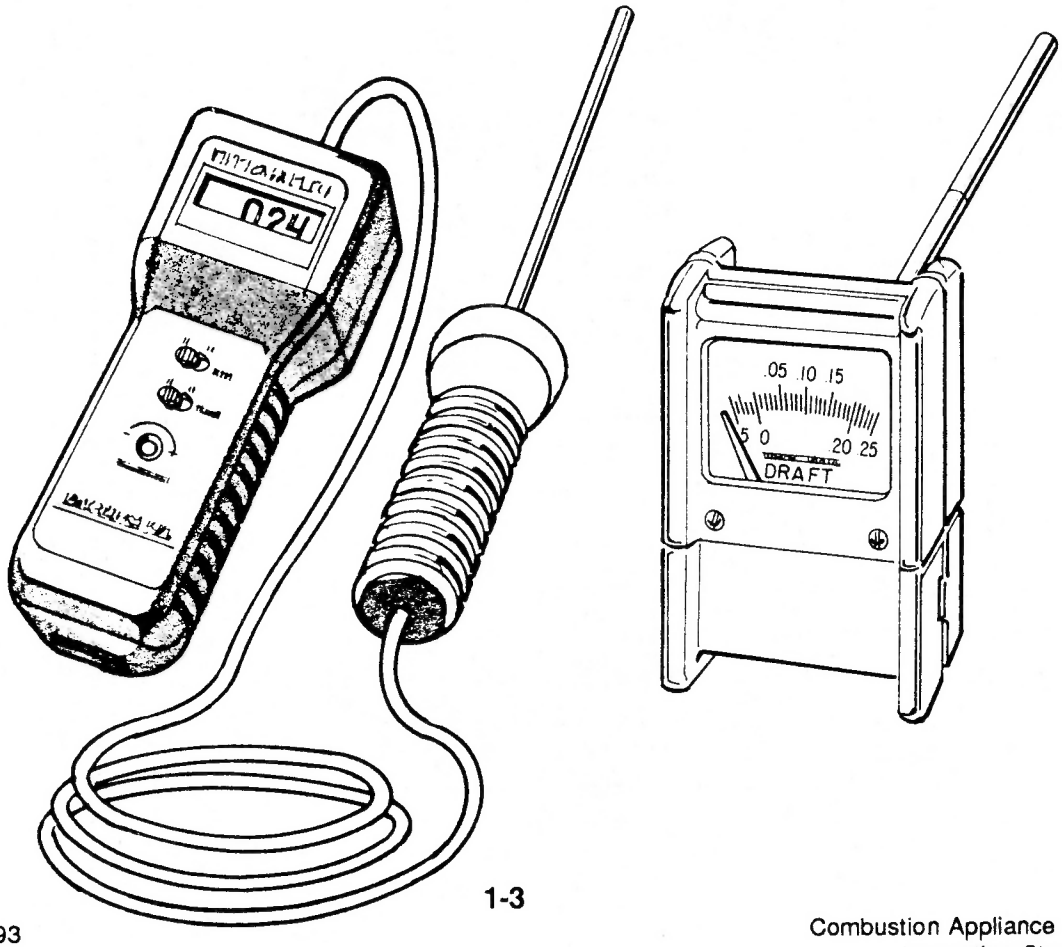

2. PERFORMANCE AND DOCUMENTATION

- Combustion appliance testing shall be performed as prescribed in the program policies and procedures.
- All applicable instruction and documentation forms shall be properly utilized.

COMBUSTION APPLIANCE SAFETY INSPECTION FORM

Client_____ Date_____
Address_____ City_____
Phone_____ Agency_____

☐ EMERGENCY
☐ CORRECTED

(A) HAZARDOUS CONDITIONS

Problem / Location / Description	Repairs Made / By Whom / Date

(B) OTHER REQUIRED REPAIRS

Problem / Location / Description	Repairs Made	Whom / Date

SAMPLE

(C) COMBUSTION SAFETY

HOME HEATER	N/A	CO: ____ ppm; Draft: ____ iwc @ ____ °F; Spillage: Y N NA
WATER HEATER	N/A	CO: ____ ppm; Draft: ____ iwc @ ____ °F; Spillage: Y N
COOK STOVE	N/A	Total Burners CO: ____ ppm Oven CO: ____ ppm
CLOTHES DRYER	N/A	CO: ____ ppm
OTHER HEATER	N/A	CO: ____ ppm; Draft ____ iwc @ ____ °F; Spillage: Y N NA

(D) COMMENTS AND RECOMMENDED REPAIRS

Technician_____ Signature_____ Date_____

(E) CLIENT INTERVIEW

☐ 1. How many people live in your home?____ Does anyone experience recurring health problems during the heating season? ____No, ____Yes: _____
☐ 2. Which of your appliances use gas? ____Home Heater, ____Water Heater, ____Cook Stove/Oven, ____Clothes Dryer
☐ 3. Do you know of any gas leaks? ____No, ____Yes: _____ Is it ____Natural Gas or ____Propane?
☐ 4. Do you burn any other kind of fuel? ____No, ____Yes: ____Wood, ____Kerosene, ____Oil, Other: _____
☐ 5. Do you have problems with any gas appliance? ____No, ____Yes: _____
☐ 6. Where is your heater (furnace) located? _____ The thermostat? _____
☐ 7. Where is your water heater located? _____ Do you get enough hot water? ____No, ____Yes
☐ 8. Are any rooms noticeably colder (warmer) than others? ____No, ____Yes: _____
☐ 9. Please turn your thermostat all the way up and show me your coldest (warmest) rooms (and where all your registers are)

COSIAP298

3. MINIMUM SAFETY CHECKS

- Appliances Requiring Inspection
  - All natural gas, propane, and oil burning appliances subject to location-related requirements.
  - Electric resistance and heat pump forced air systems which can affect or be affected by combustion appliances inside or outside the living space.
- Time Requirements for Inspections
  - As a minimum, all above-listed appliances shall be examined before and after weatherization is installed.
- Time Requirements for Repairs
  - All health and safety related problems and defects associated with combustion appliances shall be corrected before infiltration reduction measures may be installed.
  - All such problems and defects found after weatherization measures have been installed shall be corrected.

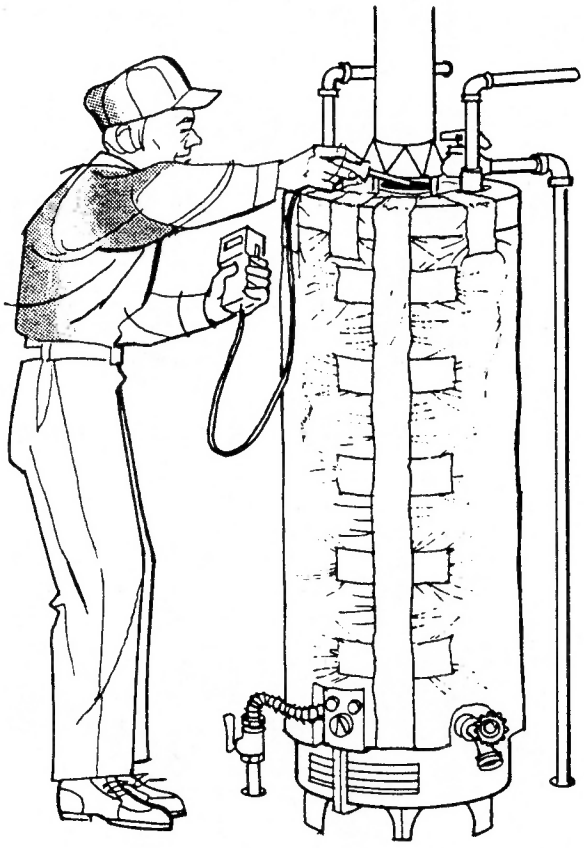

3. **MINIMUM SAFETY CHECKS (continued)**
   - **Combustion Appliances Located Outside the Living Space**
     - **Combustion appliances are considered outside the living space when they are:**
       - **Entirely outside the living space or attached outbuilding, and**
       - **More than 10 feet from any operable window or door leading inside the living space, and**
       - **<u>Not</u> in a location where combustion products from the appliance could infiltrate a forced air system.**
     - **Minimum examinations of outside appliances shall include a check of:**
       - **Gas Leaks (Item 7)**

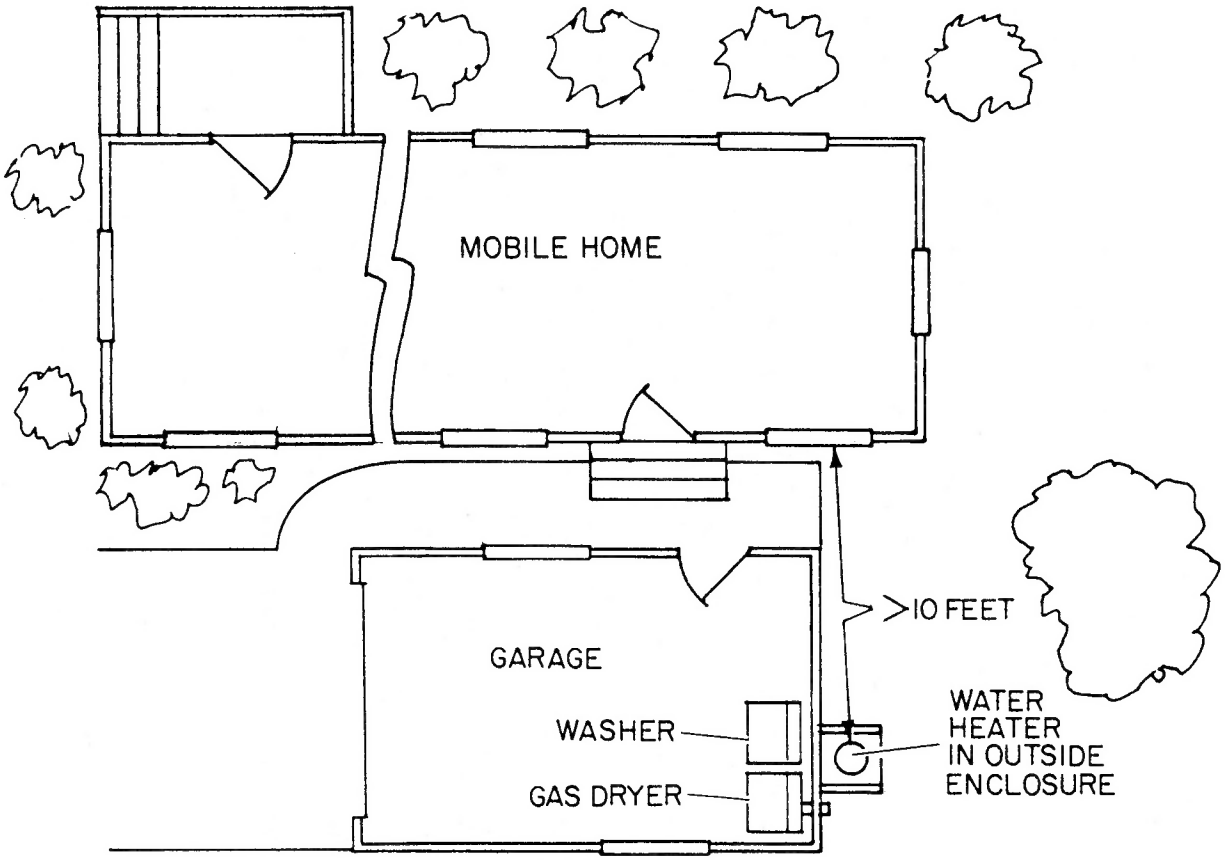

3. MINIMUM SAFETY CHECKS (continued)
   - Combustion Appliances Affecting the Living Space
     - When combustion appliances are located:
       - Partially or entirely within the living space (including closets located within the envelope but accessed from outdoors), or
       - In an attached enclosure containing an operable window or door leading inside the living space, or
       - In an outdoor location which is within 10' of an operable door or window leading into the living space, or
       - In a location where combustion products from the appliance could infiltrate a forced air duct system, <u>then</u>:
     - Minimum examination shall include a check of:
       - Solid Fuel Heating Systems (Item 4)
       - Unvented Heating Systems (Item 5)
       - Gas Leaks (Item 7)
       - Drafting (Item 8)
       - Carbon Monoxide (Item 9)
       - Heat Exchanger (Item 10)
       - Flue and Vent Systems (Item 11)
       - Combustion Air (Item 12)

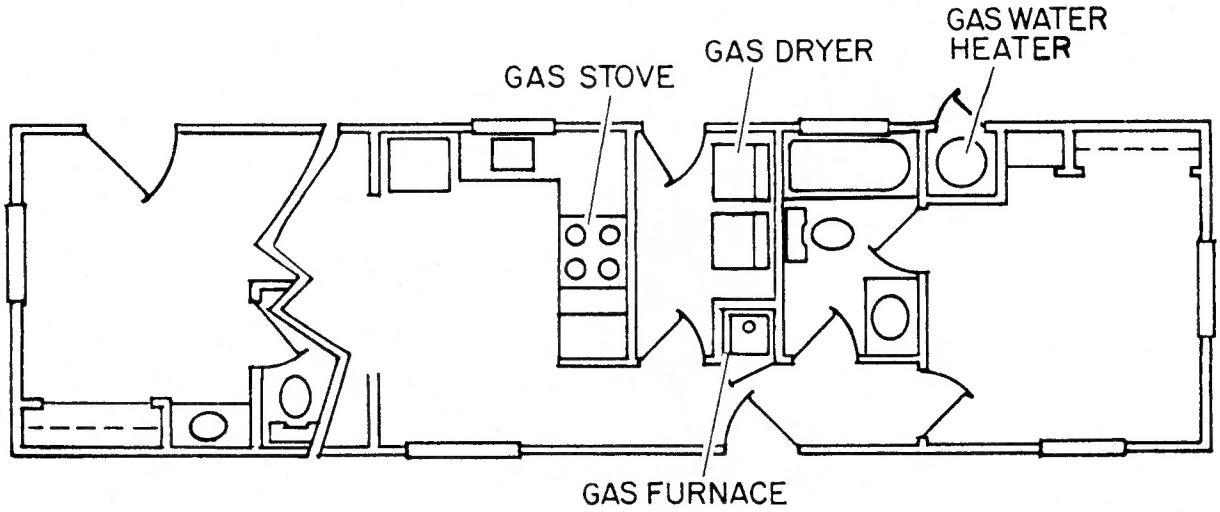

3. **MINIMUM SAFETY CHECKS (continued)**
   - **Electric Resistance and Heat Pump Forced Air Systems**
     - **Visual inspection for unsafe electrical conditions recommended.**
       - **Repairs shall be done only by licensed contractor.**
       - **Repairs recommended but <u>not</u> required for weatherization.**
     - **Supply and return systems shall be checked for leaks and obstructions as prescribed in Section 3.**
     - **Dirty filters shall be replaced as prescribed in Section 15.**
   - **Client Interview**
     - **Client shall be interviewed to determine if:**
       - **Gas leaks or other problems associated with combustion appliances exist.**
       - **Anyone in the household experiences health problems associated with the heating season.**
       - **Any appliances are being used improperly or inappropriately (i.e., gas oven being used to heat the home).**
       - **Alternative fuels are being used.**
       - **Unvented heaters are present.**

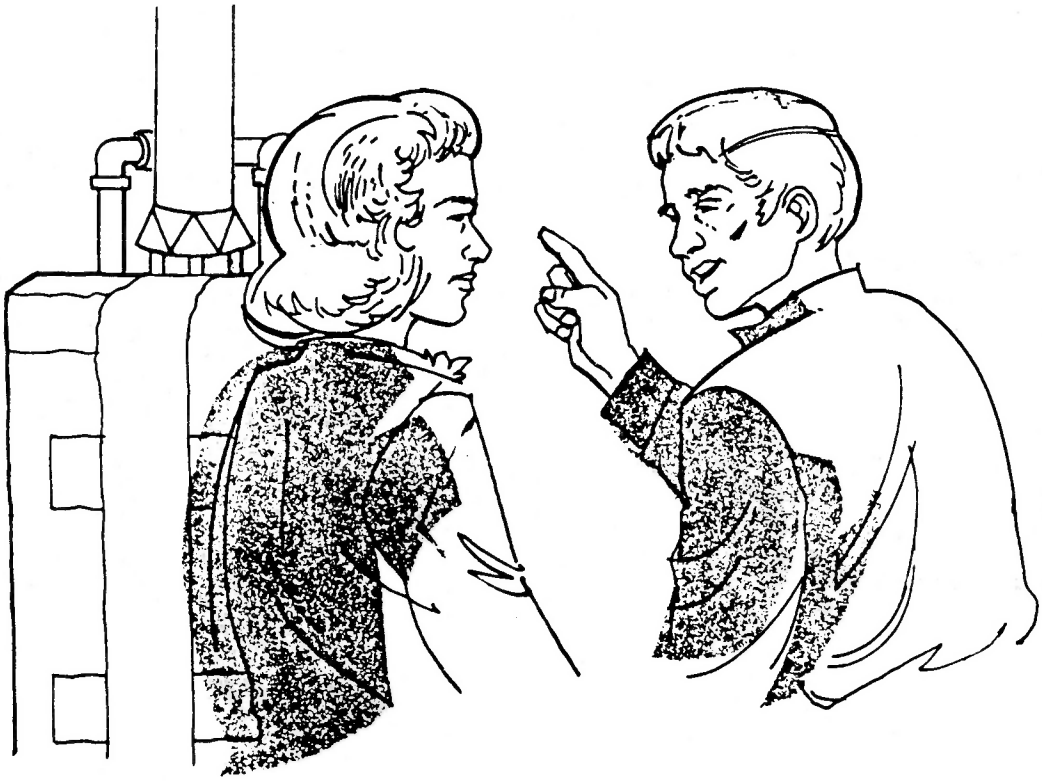

4. **SOLID FUEL HEATING SYSTEMS**
   - **Wood Burning Stoves**
     - **Shall be of approved mobile home design and be installed as prescribed in Section 14.**
       - **Shall draw combustion air from outdoors.**
       - **Shall be designed to operate with doors closed.**
     - **When a non-conforming heater is present, infiltration reduction measures shall <u>not</u> be installed unless:**
       - **Outside combustion air is provided as prescribed in Section 14.**
       - **The stove operates with doors closed.**

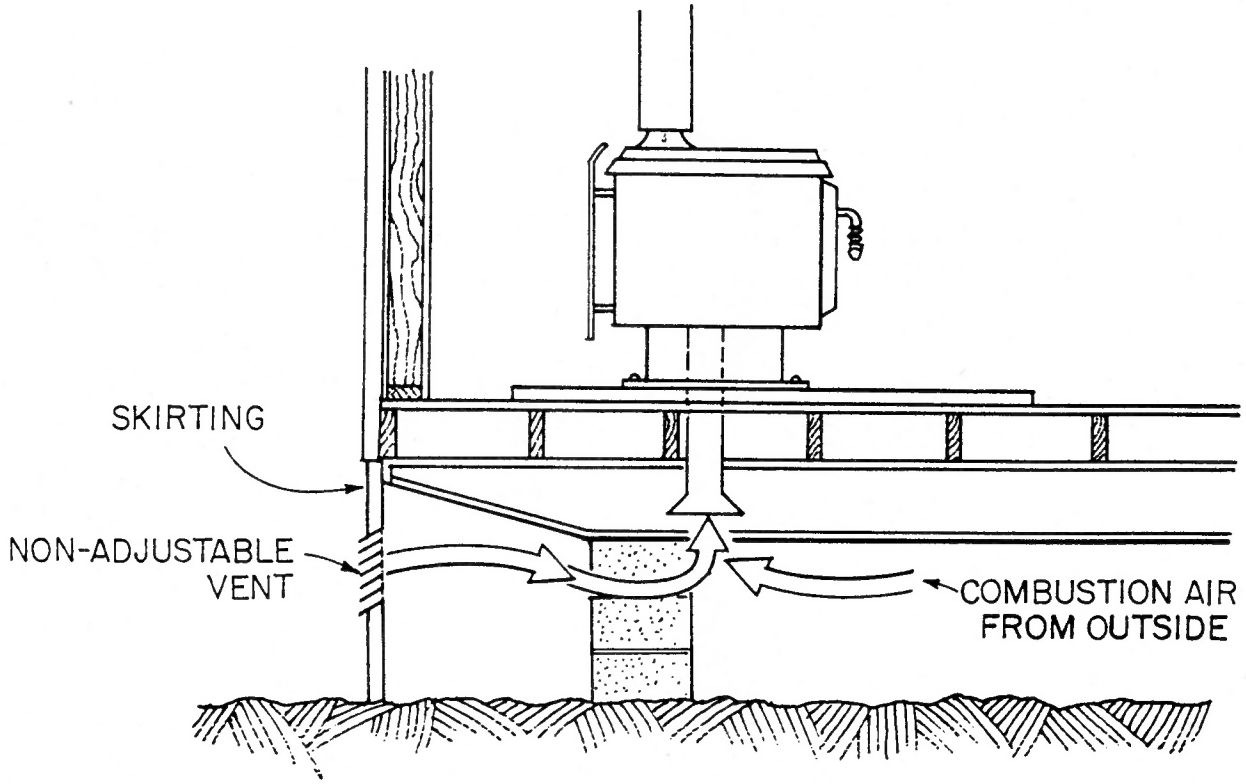

5. UNVENTED HEATING SYSTEMS

- Natural Gas, Kerosene, or Similar Fuels
  - Infiltration reduction measures shall <u>not</u> be installed if any unvented combustion heater is present in the home.
- Electric Resistance or Heat Pump Systems
  - Inspection required as prescribed in Item 3.

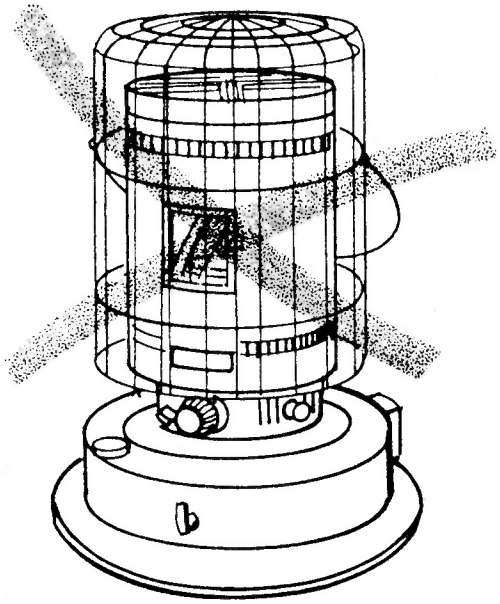

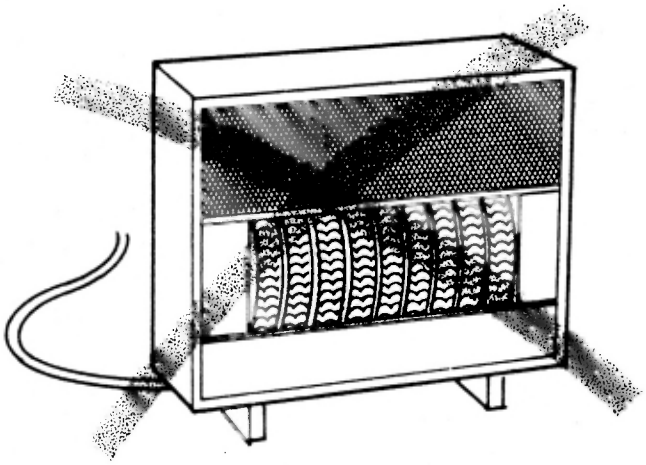

6. CONDITIONS REQUIRED DURING COMBUSTION SAFETY TESTS

- All devices which exhaust air from the space containing an appliance being tested shall be operating.
  - Clothes dryers, range hood fans, and bathroom fans shall be included.
  - "Whole house" style ventilating fans shall be excluded.
- Doors to rooms containing operating exhaust fans shall be open.
- All exterior doors and windows shall be closed.
- Tests shall be performed, when possible, with all doors to the room containing a combustion appliance open and again with the doors closed, and the results of both tests shall be properly recorded.

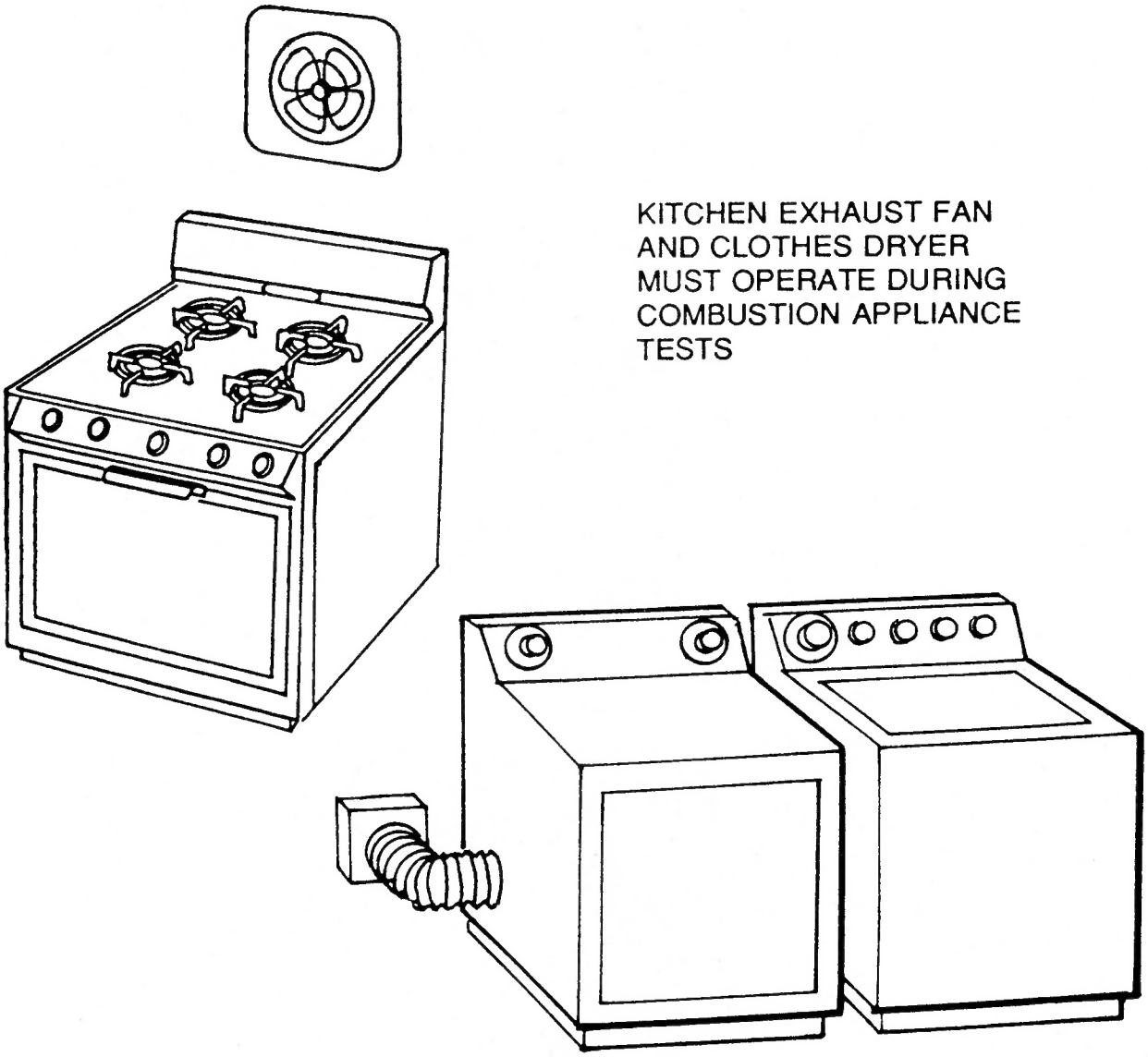

KITCHEN EXHAUST FAN AND CLOTHES DRYER MUST OPERATE DURING COMBUSTION APPLIANCE TESTS

7. GAS LEAKS

- All Natural Gas and Propane Burning Appliances
  - At a minimum, olfactory test for gas leaks required.
  - Application of soapy solution to gas valves and fittings or use of other approved gas leak detection methods recommended.
  - Any gas leak detected by smell or other detection method constitutes a hazardous condition which shall be repaired by a qualified service technician.
  - Infiltration reduction measures shall <u>not</u> be installed until all hazardous gas leaks have been repaired.

8. DRAFT EXAMINATION

- **Open Combustion Natural Gas and Propane Heating Systems and Water Heaters Equipped with a Draft Hood**
  - **Draft in the vent connector shall be evaluated after 5 minutes of appliance operation utilizing the outdoor temperature measured in the shade.**
  - **Minimum Draft Requirement, in inches of water column, shall be:**
    - **Above 80°F: -.005 IWC or more negative.**
    - **30° to 80°F: -.01 IWC or more negative.**
    - **Below 30°F: -.02 IWC or more negative.**

Minimum Draft Chart

Temperature in Degrees Fahrenheit

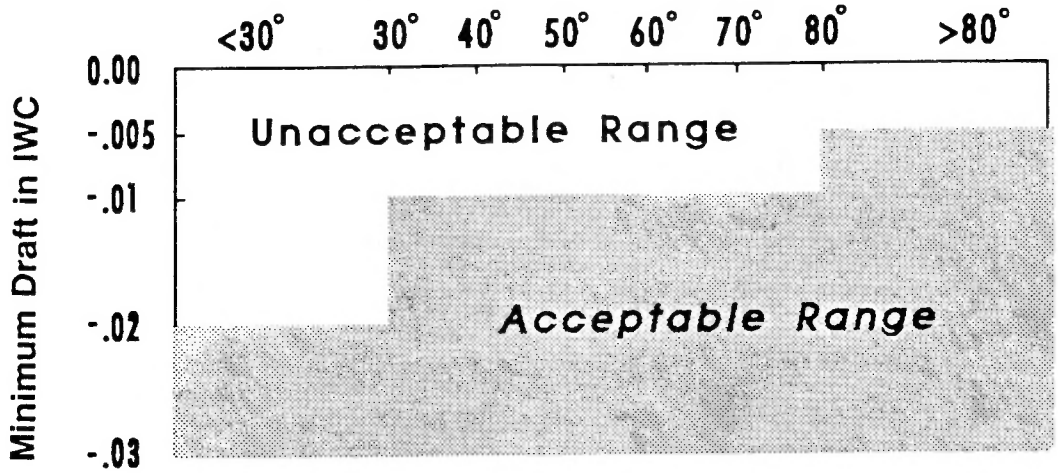

Chart Instructions:

- Measure the temperature outdoors in the shade.
- Locate that temperature on the horizontal scale.
- Drop straight down to the nearest horizontal plane of the "Acceptable Range" shaded area.
- Move straight left to the vertical scale to find the minimum acceptable draft for the current outdoor temperature

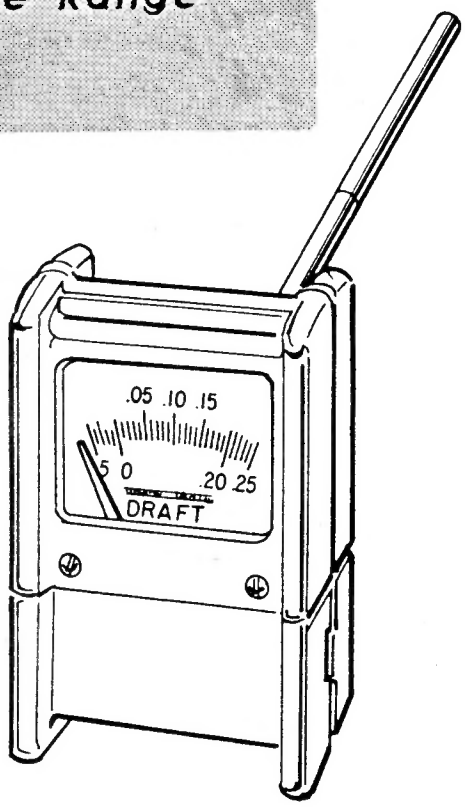

8. DRAFT EXAMINATION (continued)

- Standard Draft Test
  - A hole for the draft gauge probe shall be drilled in a straight section of single wall vent connector.
    - Hole shall be placed within 12" to 24" of the draft hood.
    - Hole diameter should <u>not</u> exceed outside diameter of probe by more than $^{1}/_{16}$".
    - Holes shall <u>not</u> be drilled in double wall pipe, nor in non-metallic pipe.
    - Following draft test, hole shall be capped with a snugly fitting plug button.
- Alternate Draft Test
  - An extinguished match smoke test shall be performed at the draft hood when a test hole cannot be drilled or other circumstances prevent performance of a Standard Draft Test.
- A tactile test for spillage and backdrafting shall also be performed on all units.
- If draft is inadequate or if spillage or backdrafting is present, infiltration reduction measures shall <u>not</u> be installed until corrections have been made and the Minimum Draft Requirement is met.

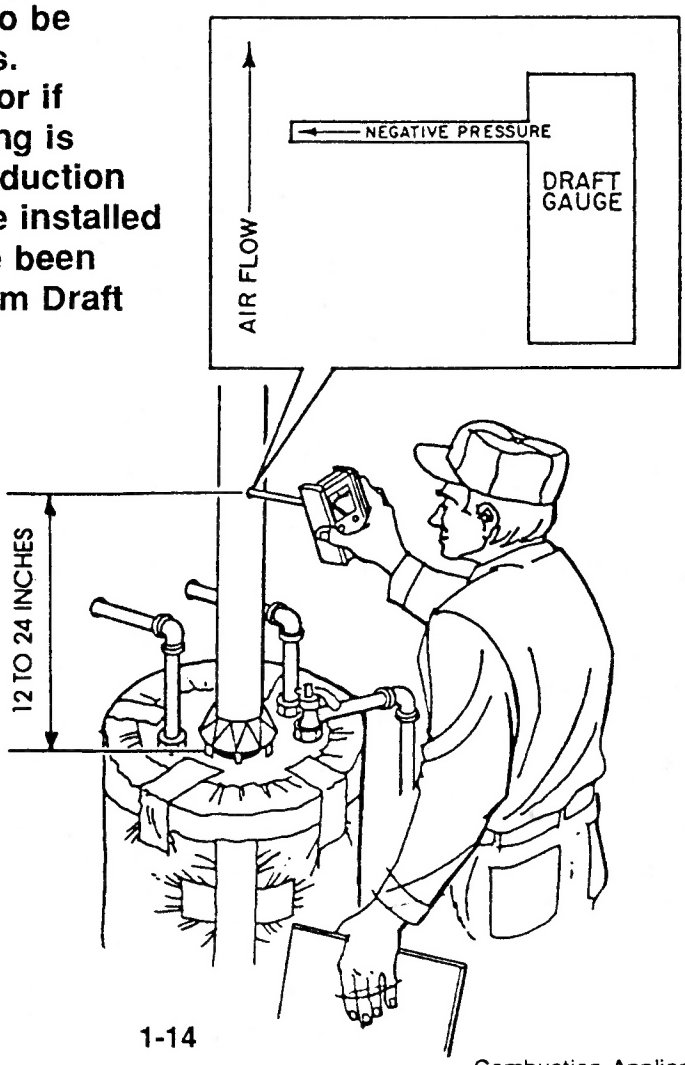

9. CARBON MONOXIDE TESTING

- All Natural Gas and Propane Heating Systems and Water Heaters
  - All tests shall be performed after at least 5 minutes of burner operation.
  - Flue Gas Sampling
    - All Appliances shall be tested for CO:
      - In combustion gases free of dilution air.
      - In each flue separately when more than one are present in the appliance.
    - When the CO at any measurement location exceeds 100 ppm, infiltration reduction measures shall <u>not</u> be installed until the appliance has been serviced by a qualified technician.
    - After service has been performed and the appliance is declared safe by a qualified technician, weatherization may proceed if CO does <u>not</u> exceed the following maximum levels:
      - 200 ppm: Wall furnaces
      - 400 ppm: Floor, gravity, and forced air furnaces; direct vent and free standing heaters; water heaters.
  - Living space sampling for all non-ducted appliances
    - A test for presence of CO shall be made in the atmosphere within 10' of each appliance.
    - If <u>any</u> CO is detected, infiltration reduction measures shall <u>not</u> be installed until the CO problem has been corrected.
  - Supply air sampling for all ducted heating systems
    - A test for the presence of CO shall be made inside the supply register nearest the heat source.
    - In any CO is present in the supply air, infiltration reduction measures shall <u>not</u> be installed until the CO problem has been corrected.

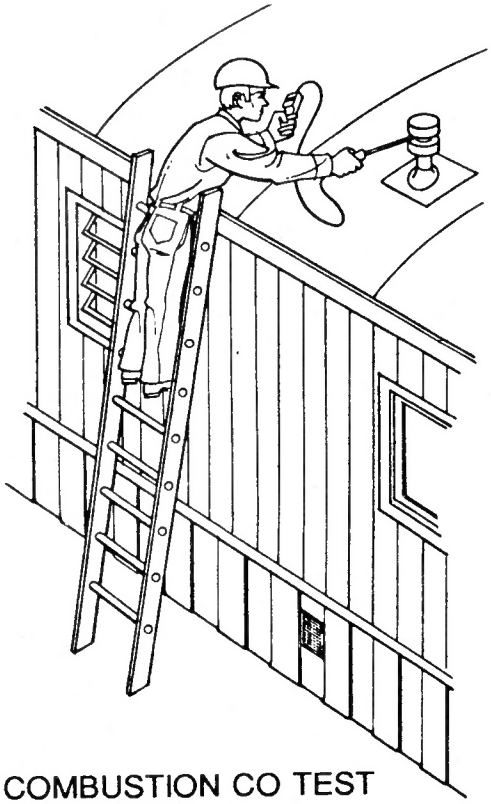

CLOSED COMBUSTION CO TEST MADE AT FLUE TERMINATION

9. **CARBON MONOXIDE TESTING (continued)**
   - **Natural Gas and Propane Cooking Systems**
     - **Ventilation requirements**
       - **An operable exhaust fan shall be present in the cooking area.**
         - **Defective fans shall be repaired or replaced.**
         - **A new fan (minimum 100 CFM) shall be installed when none is present.**
     - **Each cooktop burner shall be tested for CO at approximately 12" above the flame after at least 15 seconds of operation.**
       - **Burner shall be at the highest setting.**
       - **Burner grate shall be in place.**
     - **The oven shall be tested for CO inside the oven exhaust termination after at least 5 minutes of burner operation.**
     - **When any cooktop burner CO <u>or</u> the oven CO reading exceeds 100 ppm, infiltration reduction measures shall <u>not</u> be installed until the appliance has been serviced by a qualified technician.**
     - **After service has been performed:**
       - **If CO does not exceed levels listed below, weatherization may proceed.**
       - **If CO exceeds levels listed below, the appliance shall be replaced before infiltration reduction measures may be installed.**
       - **Cooktop Burners: 300 ppm**
       - **Oven Burners: 300 ppm**

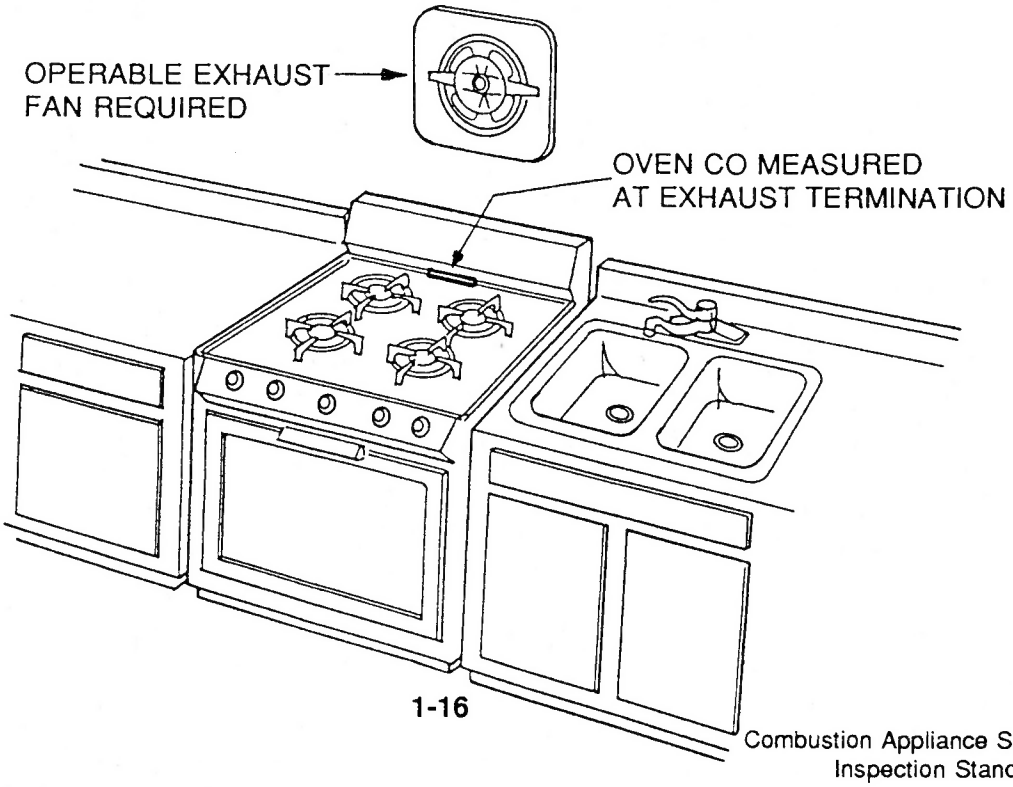

9. CARBON MONOXIDE TESTING (continued)
   - Natural Gas and Propane Clothes Dryers
     - Exhaust Venting Requirement
       - Infiltration reduction measures may be installed only when an adequate moisture exhaust system is present.
       - An existing moisture exhaust duct shall terminate on the outside of the mobile home.
       - A moisture exhaust duct installed to meet the requirements of this item shall:
         - Terminate outside the perimeter of the mobile home.
         - Be equipped with a backdraft damper.
         - Comply with all applicable codes.
     - CO Measurement
       - CO shall be measured inside the moisture exhaust outlet after 2 minutes of operation.
         - The drum shall be empty.
         - The burner shall be operating.
     - When the CO reading exceeds 100 ppm, infiltration reduction measures shall <u>not</u> be installed until the appliance has been serviced by a qualified technician.
     - After service has been performed:
       - If CO does <u>not</u> exceed 400 ppm, weatherization may proceed.
       - If CO exceeds 400 ppm, the appliance shall be replaced or permanently removed from service before infiltration reduction measures may be installed.

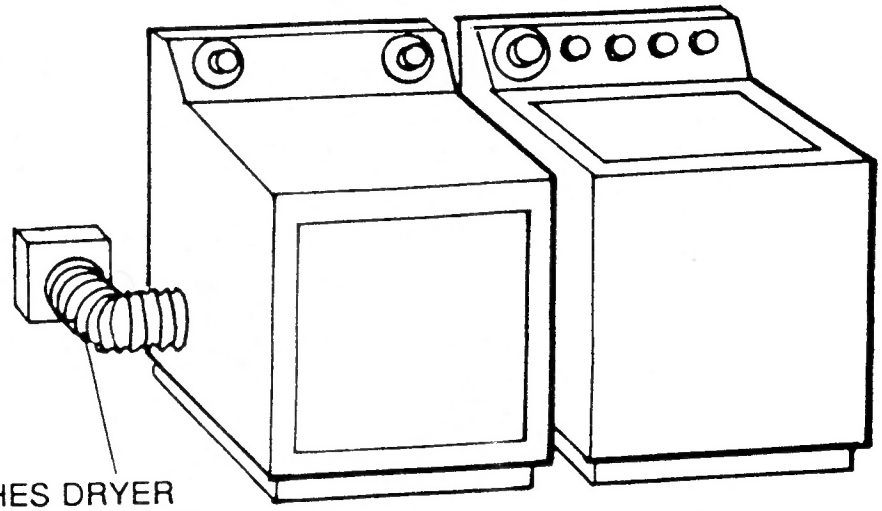

10. HEAT EXCHANGER EXAMINATION

- Natural Gas, Propane, and Oil Burning Heating Systems
  - Visual Inspection
    - Visual inspection of heat exchanger with strong light and inspection mirror is required for all heaters.
    - Observation of burner for evidence of flame interference when air handler comes on is required for all forced air furnaces.
  - Technical Inspection
    - Combustion component examination by a qualified technician is required when any of the following exist:
      - Flame interference or other physical evidence of a cracked heat exchanger.
      - Flue gas concentration of CO exceeding 100 ppm.
      - CO detected in the nearest supply register.
  - Operation and Weatherization Restrictions
    - When evidence of a cracked heat exchanger exists:
      - The client shall be instructed that the heater cannot be safely operated.
      - The heater shall be removed from service until repaired or replaced by a qualified technician.
      - Infiltration reduction measures shall <u>not</u> be installed until the heater has been repaired or replaced and determined to conform to the requirements of Item 9.

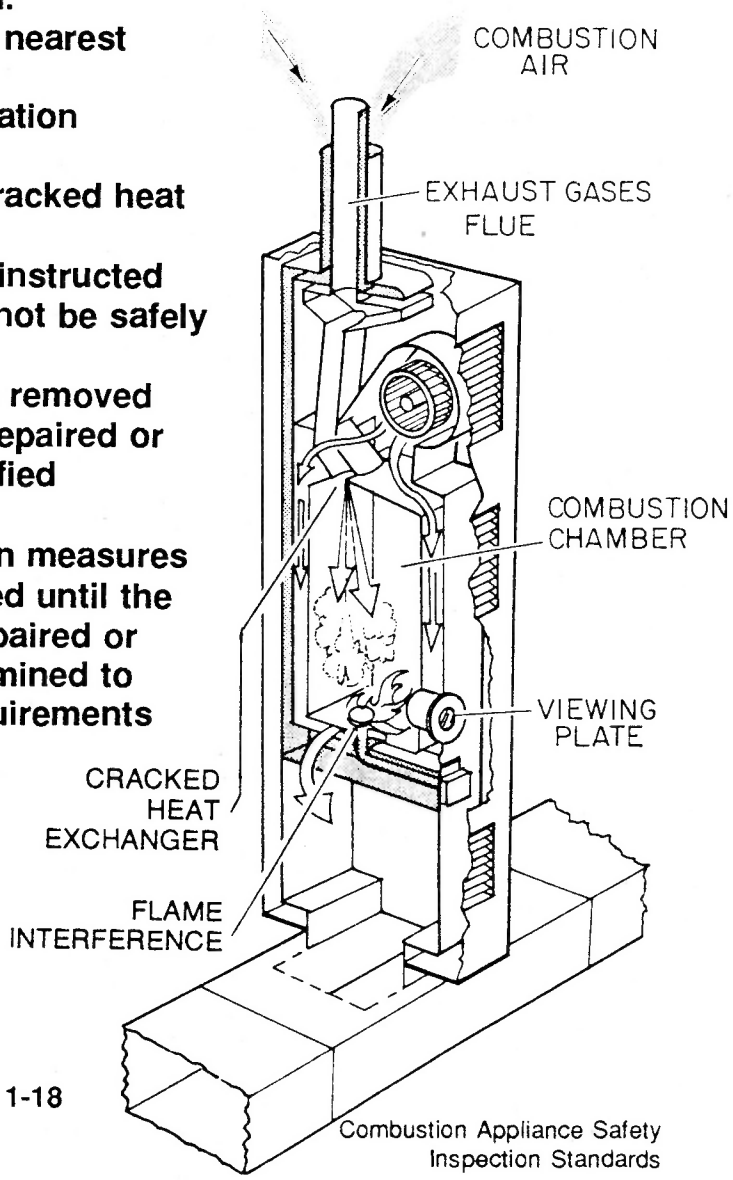

11. FLUE AND VENT SYSTEM EXAMINATION AND REPAIR

- **Natural Gas, Propane, or Oil Heating Systems and Gas Water Heaters**
  - **Examination of flue and vent systems is required.**
  - **System shall be free of:**
    - **Improperly positioned draft hood or multiple draft hoods.**
    - **Disconnections and improper connections.**
    - **Holes, deterioration, and other hazardous conditions.**
  - **System shall be of adequate length and conform to all applicable codes.**
  - **Single wall flue/vent joints shall be stable and secure.**
    - **Existing unstable joints and all joints in crew-installed pipe shall be secured with a minimum of two screws.**
    - **Three screws evenly spaced shall be installed when accessibility allows.**
  - **Double wall flue and vent pipes shall <u>not</u> be drilled or have screws installed unless expressly permitted by local code.**
  - **Double wall pipes with pre-existing holes through both the outer and inner layers shall be replaced with new listed pipe.**

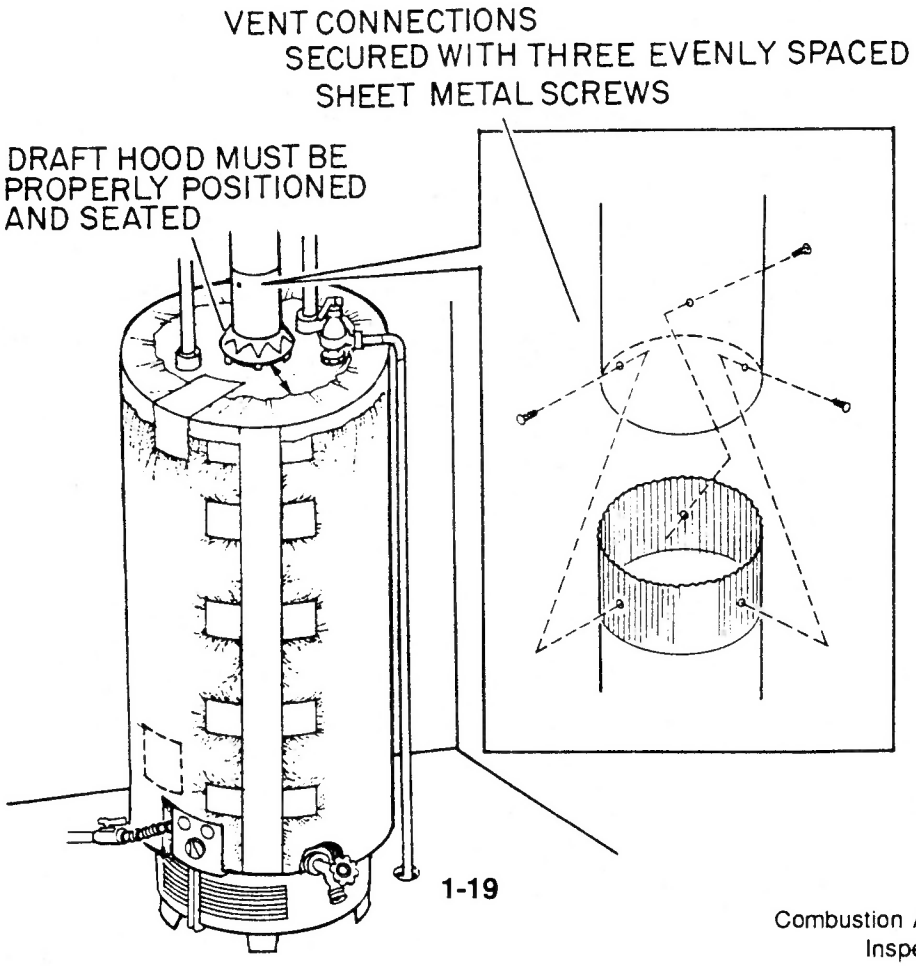

11. FLUE AND VENT EXAMINATION AND REPAIR (continued)

- All flue and vent terminations shall be at least
  - 1' above the roof.
  - 2' above or 8' away from any wall or other portion of a building with an upward slope of more than 45 degrees.
- Water heater vent terminations shall be 2' above any portion of an evaporative cooler located within 10'.
- Bracing is required if pipe termination is more than 5' above roof at point of penetration.
- Client shall be informed of each flue or vent pipe which is non-conforming.
- When a flue or vent pipe is <u>not</u> of proper height, infiltration reduction measures shall <u>not</u> be installed until corrections have been made.
- Ceiling bypasses surrounding flue/vent pipes located within conditioned space shall be repaired as prescribed in Section 2.

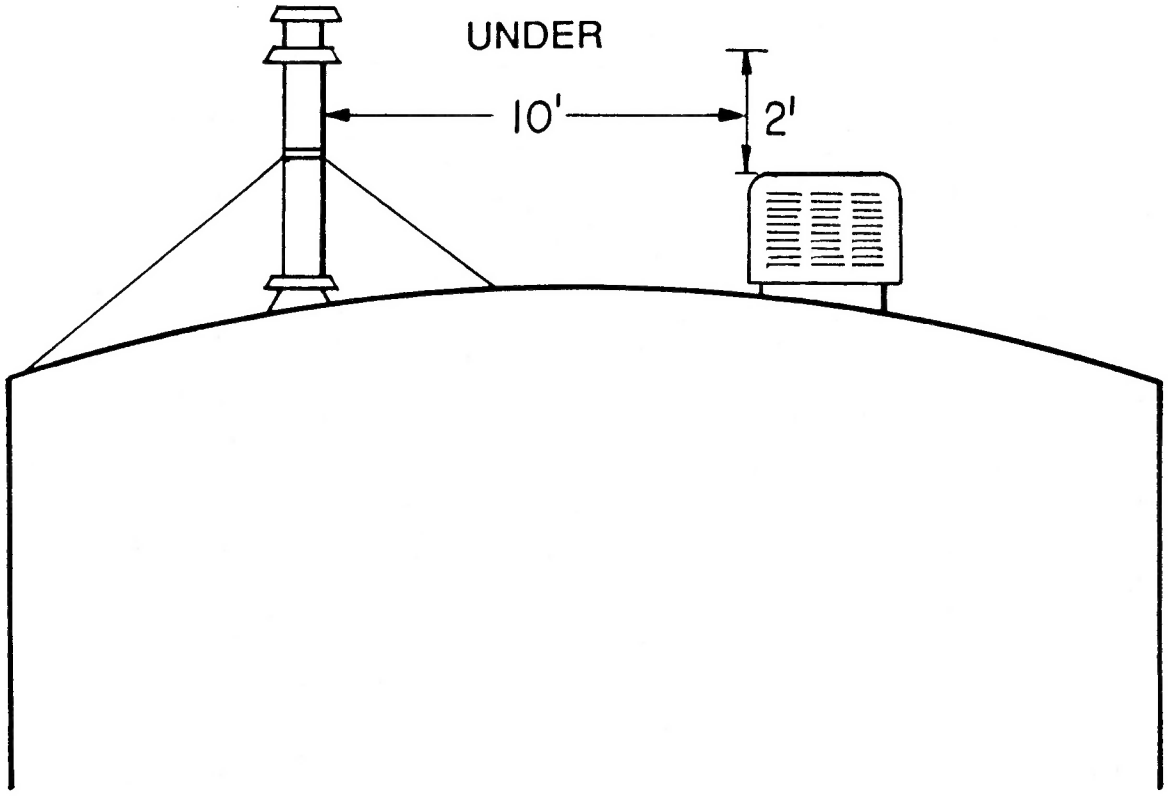

12. COMBUSTION AIR REQUIREMENTS

- Natural Gas, Propane, or Oil Heating Systems and Gas Water Heaters
  - All units shall obtain combustion air from outside the living space.
  - Systems located in an enclosure and taking combustion air from outdoors shall meet these requirements:
    - Two vent openings are required (one within 1' of the floor and one within 1' of the ceiling) each having 1 sq. in. free area for every 4,000 Btu/hr. input of all open combustion appliances in that space (see Appendix C).
    - The upper vent in a water heater enclosure may be provided by the listed double concentric pipe assembly common in mobile homes.
  - Systems taking combustion air from underneath the mobile home shall meet these requirements:
    - Undampered venting is required in the skirting equal to at least twice the NFV area of the air intake opening in the floor.
    - Venting shall be located on at least two different sides of the mobile home.
  - Combustion air vents and ducts shall be:
    - Proper type and size.
    - Free of obstructions or other defects.
  - If the source of combustion air is improper or inadequate, infiltration reduction measures shall <u>not</u> be installed until necessary corrections have been made.

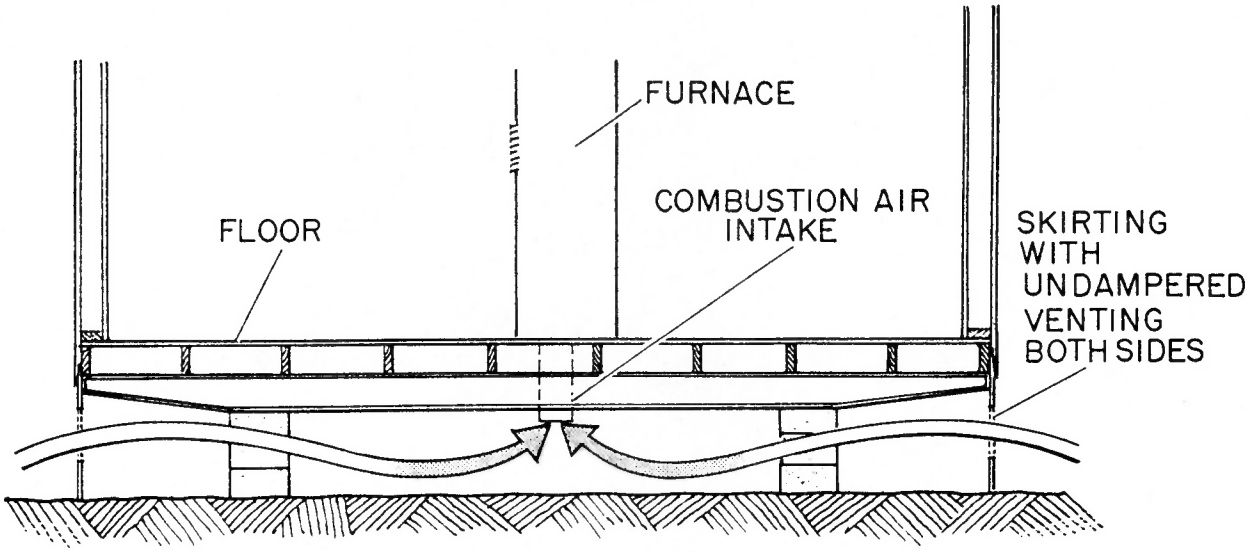

12. **COMBUSTION AIR REQUIREMENTS (continued)**
    - **Systems Taking Combustion Air from Inside the Living Space**
        - **Appliances which are allowed to draw combustion air from inside the mobile home:**
            - **Ranges**
            - **Ovens**
            - **Clothes dryers**

13. **ISOLATION OF RETURN AIR**
    - **Downflow Furnace in Exterior Closet**
        - **When the furnace return air system is open to the closet (<u>not</u> ducted and isolated from the closet atmosphere) the closet shall be sealed so that:**
            - **Unconditioned air does <u>not</u> enter the return system through bypasses in the closet.**
            - **Products of combustion cannot be drawn into the return system from any open combustion appliance (such as an adjacent water heater in an adjoining enclosure).**

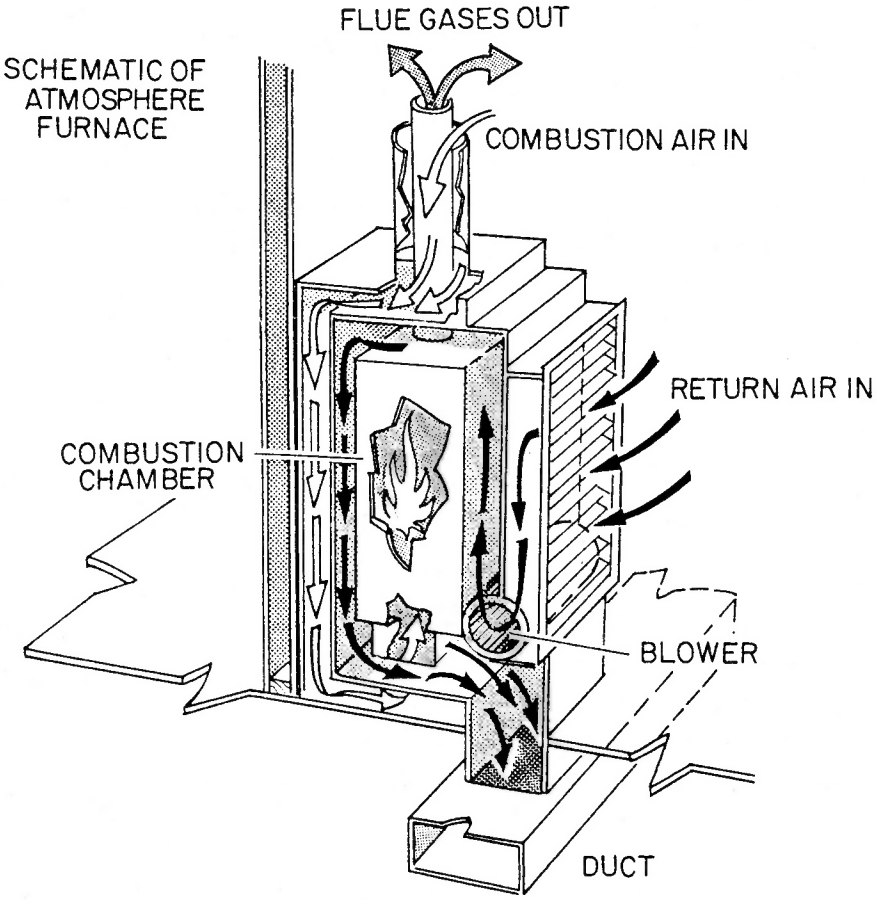

14. HIGH LIMIT SAFETY SWITCH
    - All Forced Air Systems
        - Safety Switch Testing
            - Test of the high limit safety switch recommended.
                - Replacement of a malfunctioning switch required.
                - Replacement shall be made only by a qualified technician.

15. DUCT SYSTEM ANALYSIS AND REPAIR
    - All Forced Air Systems
        - Duct systems shall be inspected, analyzed, and repaired as prescribed in Section 3.

16. FORCED AIR TUNE-UP
    - All Forced Air Units
        - Filter and Alarm Installation
            - Reusable filters, and filter alarms when installed, shall be installed as prescribed in Section 15.
        - Other Tune-Up Measures
            - All other tune-up measures, excluding the combustion safety inspections prescribed in this section, shall be performed by a qualified technician.

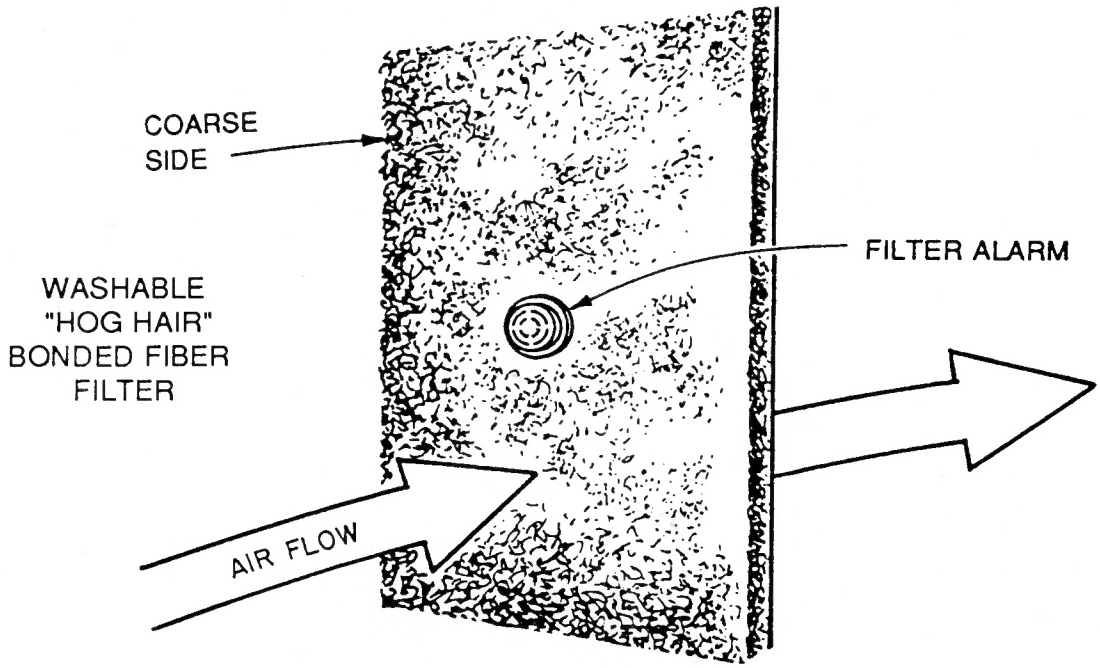

NONFEASIBILITY CRITERIA FOR COMBUSTION APPLIANCE SAFETY INSPECTIONS

1. **Combustion appliance has been abandoned and permanently disconnected.**

2. **No combustion appliance which requires testing is present.**

SECTION 2

BLOWER DOOR USE AND ENVELOPE SEALING

PREFACE

The blower door has probably revolutionized the residential energy conservation field more than any other major development. Those states and programs which regularly use one in their retrofit process have dramatically increased both actual energy savings and the client comfort level. And yet, like any other tool, the blower door is only as good as its user.

First-time users are often concerned that the blower door will identify extra work to be performed and create air quality problems. In fact, when used properly, the blower door creates neither of these problems. It is true that the blower door will likely identify air leakage sites weatherizers have not routinely sealed in the past. On the other hand, some of the work previously performed is no longer required. Typically, crews with blower doors spend more time sealing big air leaks and bypasses, and less time weatherstripping doors and windows or caulking cracks which contribute little to the overall infiltration rate.

The blower door simplifies the process of locating bypasses which range from leaks between ceiling and wall panels, to plumbing and electrical penetrations, to openings in the top and bottom of the furnace closet. It eliminates "blind" weatherization and makes possible goal directed leakage reduction.

In addition to identifying leaks, the blower door is used to determine if a house is too tight before and after infiltration reduction measures are installed. Replacing windows or caulking a house that already has air quality problems, for example, will make matters worse. (Infiltration reduction measures encompass all duct and shell sealing activities, including window and door replacements, cooler and air conditioner covers, and caulking and weatherstripping.)

Blower door technology may be employed to measure house pressurization or depressurization resulting from a grossly imbalanced forced air system. Such a condition can be the result of a variety of factors, including disconnected supply ducts and catastrophic return leaks. The blower door will help locate such bypasses so they can be properly sealed and system balance can be improved.

A wide variety of materials may be employed to seal bypasses. The following lists are representative of products commonly used in blower door driven weatherization.

RIGID MATERIALS
- Gypsum board
- Polyisocyanurate foam insulation board
- Foil faced radiator backer board
- Plywood, wafer board, particle board, Masonite
- Foil or vinyl-faced rigid fiberglass duct board
- Sheet metal

FILMS, MEMBRANES, AND FLEXIBLE BARRIERS
- Polyethylene (6 mil or thicker, UV resistant, reinforced preferred)
- Spun Bond Olefin (Tyvek and similar products)
- Asphalt roofing material
- Foil/bubble/foil flexible radiant barriers

CAULKS, FOAMS, FILLERS, GASKETS, AND PATCHING MATERIALS
- High density blown cellulose insulation
- Urethane foam -- expanding or non-expanding
- A variety of caulking products
- Masonry patch material (fiberglass reinforced recommended)
- Foam rubber gasketing
- Weatherstripping
- Closed-cell cushion foam

Some materials, such as urethane foam, are used to fill irregular holes with great success. Noncombustible material, such as sheet metal, provide protection around chimneys and other high temperature applications. Exposure to sunlight, solvents, and combustibility are limitations to be considered when using extruded polystyrene or other insulation board stock, but it simultaneously provides a vapor barrier and thermal protection when applied. Attention to durability, potential fire hazards, and effectiveness at stopping air movement are the primary concerns.

Emphasis should always be placed on properly matching the materials to the task. It not only demonstrates expertise, it also assures success.

SECTION 2

BLOWER DOOR USE AND ENVELOPE SEALING STANDARDS

1. BLOWER DOOR APPLICATION
   - All Mobile Homes
     - A blower door shall be employed in the weatherization process:
       - For infiltration measurement, analysis, and documentation.
       - To assist in the location and repair of leaks in the envelope and duct system.

2. TEST EQUIPMENT
   - Blower Doors
     - Commercially produced equipment shall be used.
     - House pressure gauges calibrated in pascals shall provide a range from 0 to 60 and accuracy within ± 2.5 pascals.
     - House pressure gauges calibrated in inches of water shall provide a range from 0 to .25 and accuracy within ±5%.
     - Fan air flow gauges shall display pascals or CFM, with a CFM range of 500 to 6000 and accuracy within ±10%.
   - HVAC Safety Test Equipment and Accessories
     - As specified in Section 1, Item 1.
   - Maintenance
     - Test equipment shall be properly handled and maintained.
     - Data measuring instruments shall be calibrated, as needed, no less frequently than once per year.

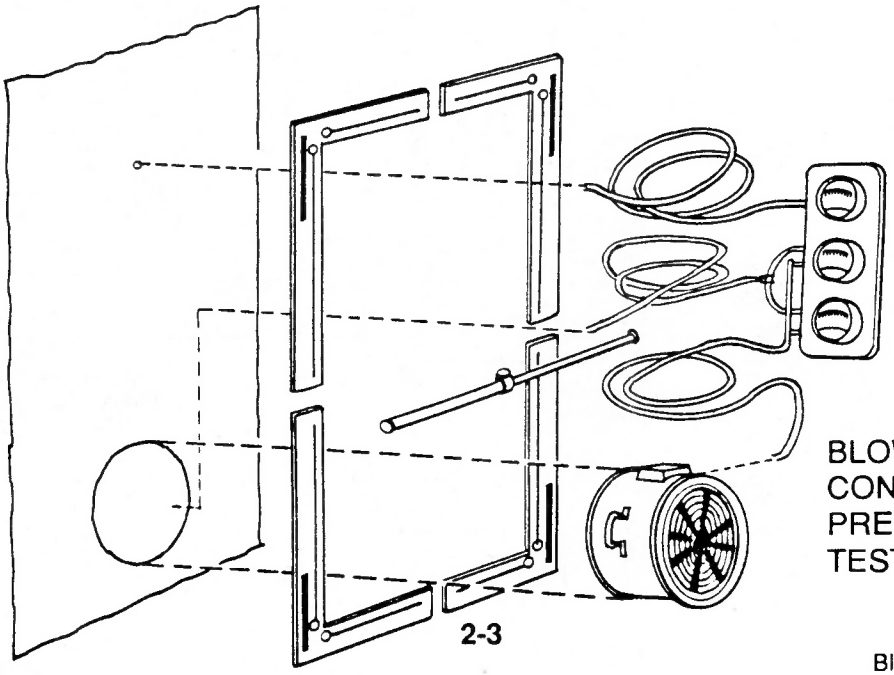

BLOWER DOOR CONFIGURED FOR PRESSURIZATION TESTING

3. PERFORMANCE AND DOCUMENTATION

- **Blower Door Analysis**
  - **A blower door shall be used to measure initial and final envelope and duct leakage and leakage reductions achieved by the installation of weatherization measures.**
  - **Blower door pressurization and/or depressurization of the mobile home shall be used in conjunction with smoke generator and/or tactile detection methods to locate and determine the relative magnitude of leaks in the duct system and in the envelope.**
  - **The blower door shall be set up and operated in conformance with this section and the manufacturer's instructions.**
- **Documentation**
  - **The applicable blower door documentation form shall be utilized as prescribed by the program policies and procedures.**

BLOWER DOOR PILOT DATA SHEET FIELD FORM

Job Number | PG&E Account # | EP WX Contractor # | Account: Last Name

Project Area | Control Number | Unit

Customer: Last Name | First Name | Telephone Number ( ) - | Time in Home

Customer: Street Address | Unit # | City | ZIP Code | Time out of Home

Type of Structure: Single Family; 2-3-4 Plex; MUD; Number of Stories; Slab on grade?

Wall Type: Wood Frame; Stucco; Other; Masonry

Heating System Type: Wall; Floor; Central; Heat Pump; # Wood Stoves; # Fireplaces; Other

Heating Fuel Type: Natural Gas; Electric; Wood; Other

Cooling System Type: Central AC; Window / Wall AC; Evaporative Cooler; Fans (excluding whole house fans); None or Other

Energy Specialist

GRIDPAD Used? Y N

Living Area (sqft) | # People + # Large Pets = Total Occupants

Economic Stop Parameters

Open Combustion Input Rating Total 0 0 0 Btu/hr | Target Shell CFM50 | # of Crew Persons | CFM50 Reduction Required per Hour per Crew: Ducts, Shell

Location of Blower Door Setup: Front Door; Back Door; Side or other Door

PRE-WEATHERIZATION BLOWER DOOR DIAGNOSTICS — Date of Pre-Test

Total Leakage (A) | Initial CFM50 with ALL ducts UNBLOCKED (Standard Test Conditions) | Duct System? Y N

Shell Leakage (B) | Initial CFM50 with ALL ducts and registers BLOCKED

Duct Leakage (C) | Calculated Initial Duct Leakage (A minus B)

Number of Persons who WORKED on Pre-Test

(Excluding Combustion Safety Test) Pre-Test Total Person Hours

DUCT SYSTEM SEALING (Applies to METAL- with or without FIBERGLASS INSULATION and FLEX DUCT SYSTEMS ONLY)

Work: | Work:

Old CFM50 | Reduction | Old CFM50 | Reduction

New CFM50 | Crew Hours | New CFM50 | Crew Hours

Catastrophic Disconnects Sealed

Type and # Plenums Sealed: Metal; Wooden Platforms; Wall/Floor Cavity

Number Registers Sealed

Number of Other Joints Seale

Type o

Flexible Metal; Flexible Plastic; Rigid R; Rigid Sc; Other

	Crawlspace	Attic	Other/Describe
...ation			
...cessible in Each Location			

Number of Persons who WORKED on Ducts

(Excluding Combustion Safety Test) Duct Work Total Person Hours

SAMPLE

SHELL INFILTRATION SEALING — # Catastrophic Shell Leaks Sealed (describe):

Work: | Work: | Work:

Old CFM50 | Reduction | Old CFM50 | Reduction | Old CFM50 | Reduction

New CFM50 | Crew Hours | New CFM50 | Crew Hours | New CFM50 | Crew Hours

Indicate Number Installed

Doors Weatherstripped; Door Thresholds; Doors Replaced; Tubes of Caulk; Accesses Weatherstripped; Electrical Outlet Gaskets; Evaporative Cooler Covers; Kitchen Exhaust Dampers; Chimney Dampers; Others

Thermal Bypasses Sealed: # Bathtub Hole(s); # Others

POST-WEATHERIZATION BLOWER DOOR DIAGNOSTICS — Date of Post-Test

Total Leakage (D) | Final CFM50 with ALL ducts UNBLOCKED (Standard Test Conditions)

Shell Leakage (E) | Final CFM50 with ALL ducts and registers BLOCKED

Duct Leakage (F) | Calculated Final Duct Leakage (D minus E)

Number of Persons who WORKED on Shell

Excluding Combustion Safety Test) Shell Work Total Person Hours

Number of Persons who WORKED on Post-Test

(Excluding Combustion Safety Test) Post-Test Total Person Hours

Reason Why Failed To Achieve Target(s): Shell: | Ducts:

Crew Member's Last Name and First Initial | Crew Leader's Signature X | Date

Revision Date 6/29/92

4. TEST CONDITIONS

- All Mobile Homes
  - All storm and prime windows closed.
  - All exterior doors closed.
  - Interior doors to conditioned rooms open.
  - All combustion appliances affected by blower door adjusted to <u>not</u> come on:
    - Heater or furnace thermostat all the way down or in "off" position.
    - Water heater thermostat all the way down or in "pilot" setting.
  - Exhaust fans, vented clothes dryers, and air conditioners off.
  - Blower door installed in exterior doorway (preferably centrally located) with fewest obstructions within 3' of the fan.
  - When blower door location leads to a porch, garage, or other enclosed area, outside doors and windows in the enclosure open.
  - Blower door set up and operated, with gauges properly zeroed, in conformance with manufacturer's instructions.

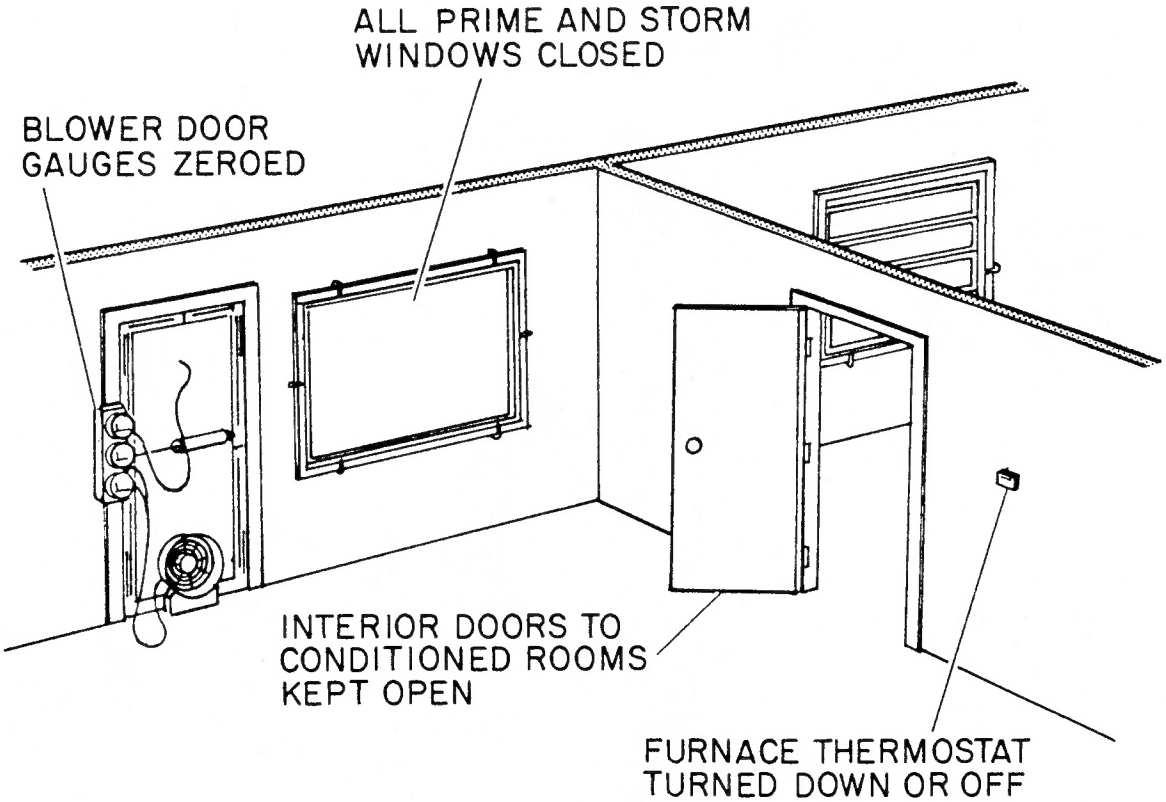

4. TEST CONDITIONS (continued)

- Wall/window air conditioners, evaporative coolers, and window fans blocked off.
  - Air conditioner dampers closed.
  - Winter covers installed when present.
  - Window mount air conditioners, which are removed during winter and which leak, temporarily sealed.
- Catastrophic leaks repaired or blocked off.
  - If <u>not</u> already repaired, catastrophic leaks shall be blocked off, as needed, to achieve a CFM_{50} reading for total home infiltration (all ducts unblocked).

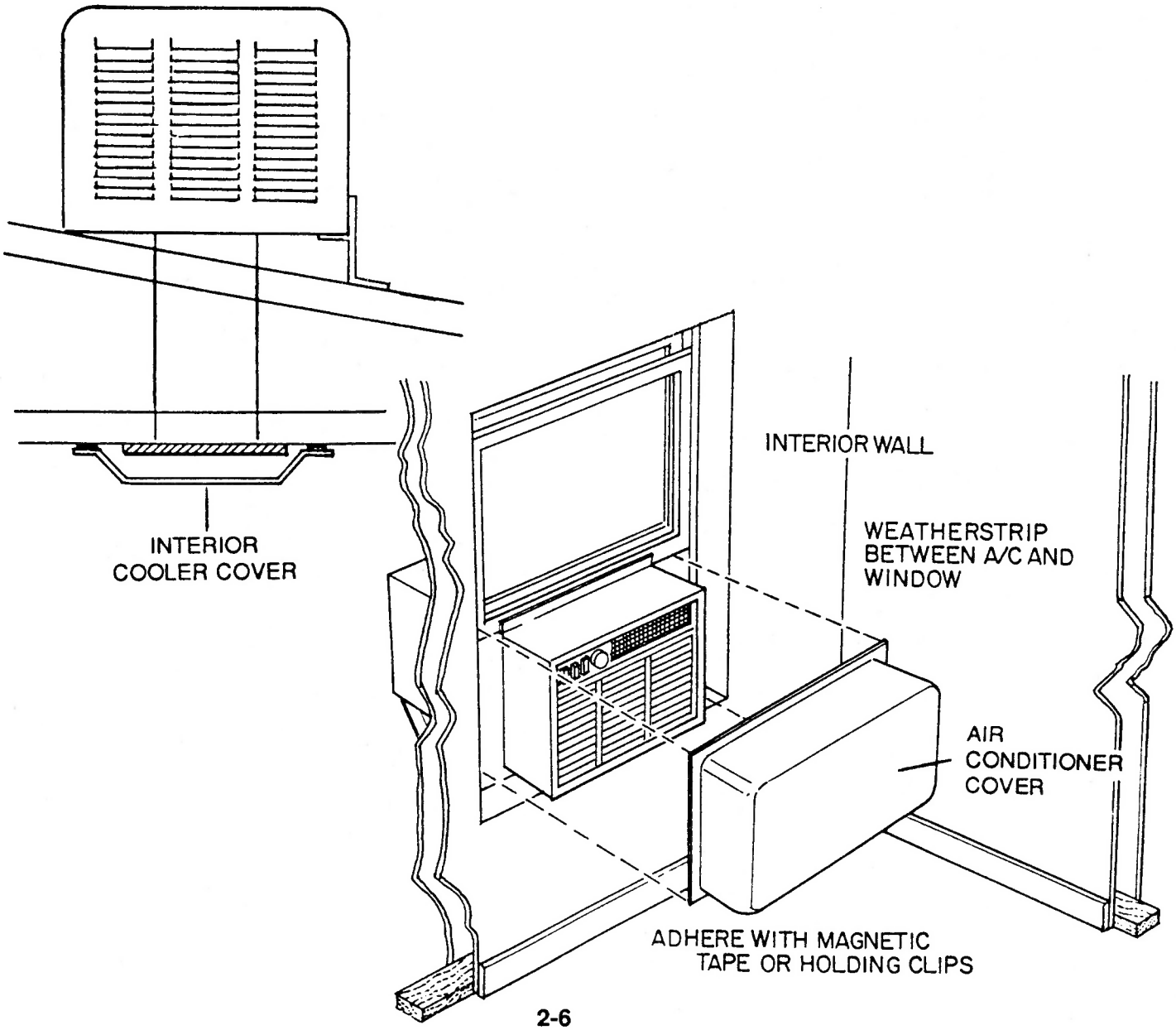

4. TEST CONDITIONS (continued)
   - Pressurization Test Requirement
     - All exhaust fans, which have a functional backdraft damper, blocked off.
       - Applies only when the mobile home is pressurized.
       - Does <u>not</u> apply when the damper does <u>not</u> close properly or when no damper is present.

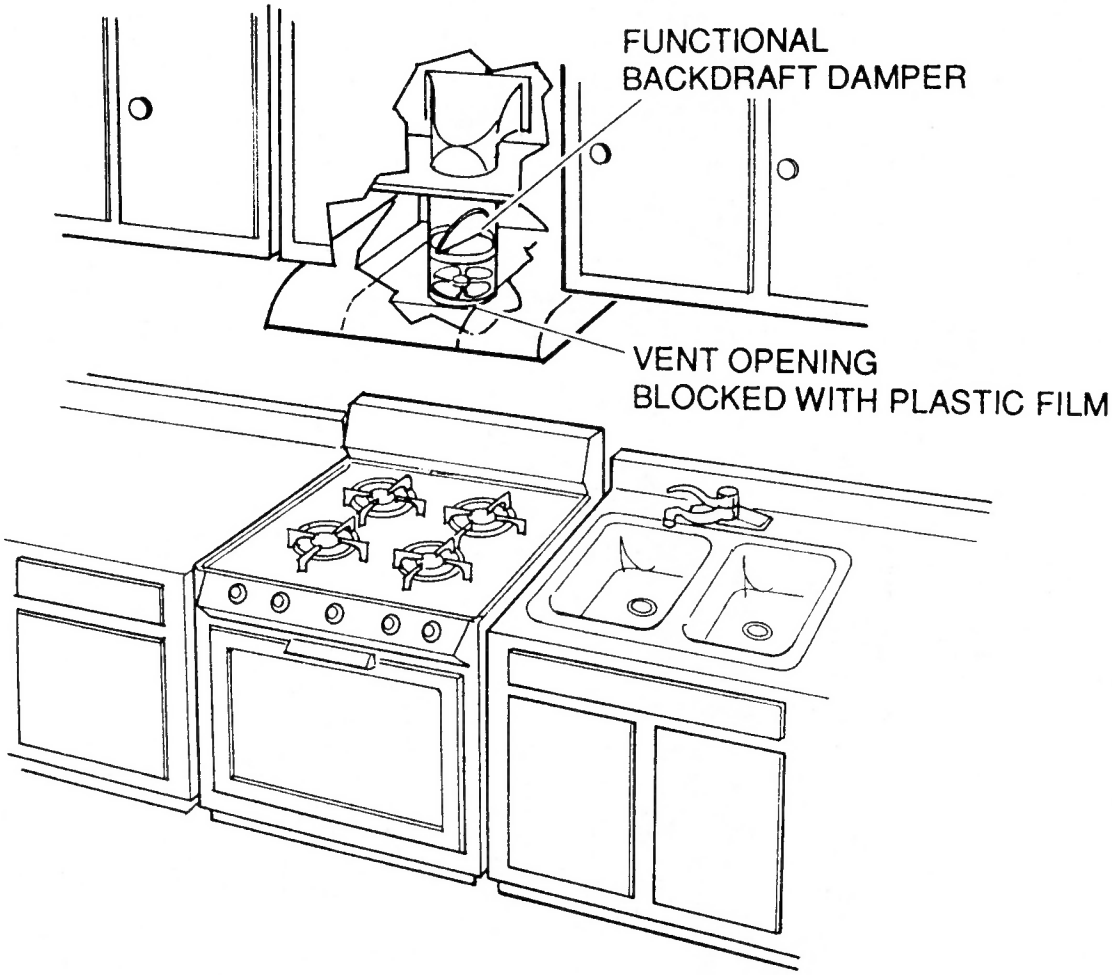

4. **TEST CONDITIONS (continued)**
   - **Mobile Homes with Wood Burning Appliances**
     - **Wood stove fires completely out when depressurizing.**
     - **Wood stove dampers and air inlet controls closed.**
     - **When pressurizing and fire is <u>not</u> completely out, air inlet controls closed to minimize air leakage and prevent firebox from overheating.**

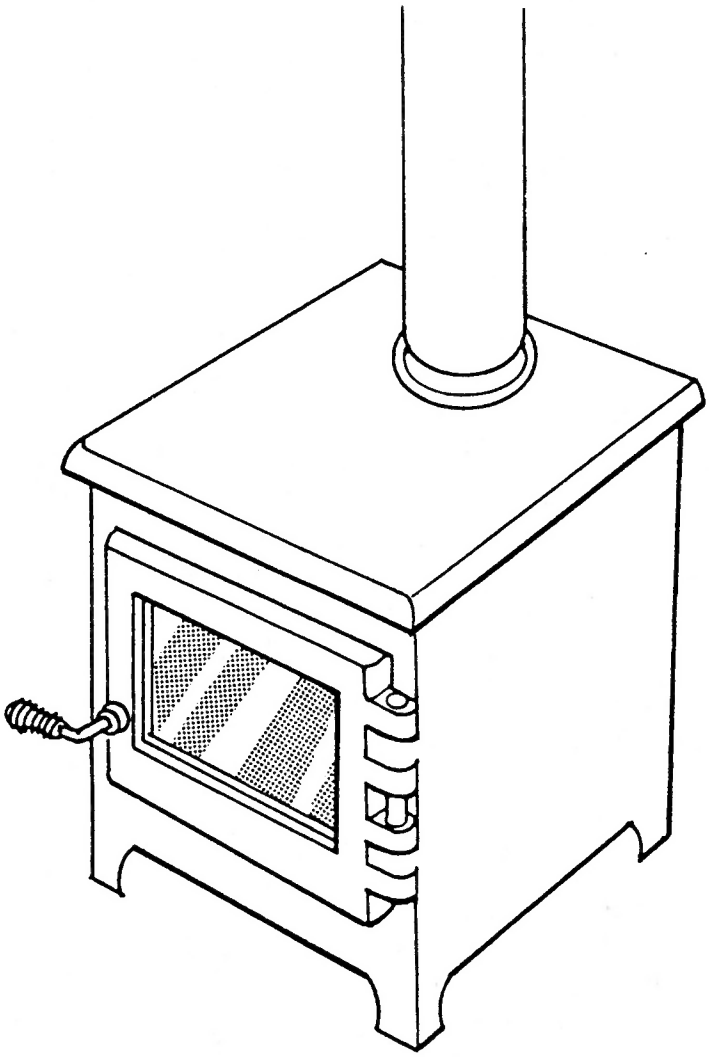

AIR INLET CONTROLS CLOSED ON
WOOD BURNING APPLIANCES

4. TEST CONDITIONS (continued)
   - Windy Conditions
     - Precautions shall be taken to minimize the adverse effects of wind on the accuracy of gauge readings, which may include:
       - Use of wind dampeners (or any other devices or methods) provided or prescribed by blower door manufacturer.
       - Use of baffles as protection for the ends of outdoor hoses.
       - Extension of outdoor hoses into wind-protected locations.
   - Health Hazards
     - Blower door testing and weatherization shall <u>not</u> be scheduled at a time when the health or safety of the occupants and/or installation crew is likely to be jeopardized.
     - Infiltration reduction weatherization shall <u>not</u> take place until hazardous conditions relating to combustion appliances are corrected as prescribed in Section 1.

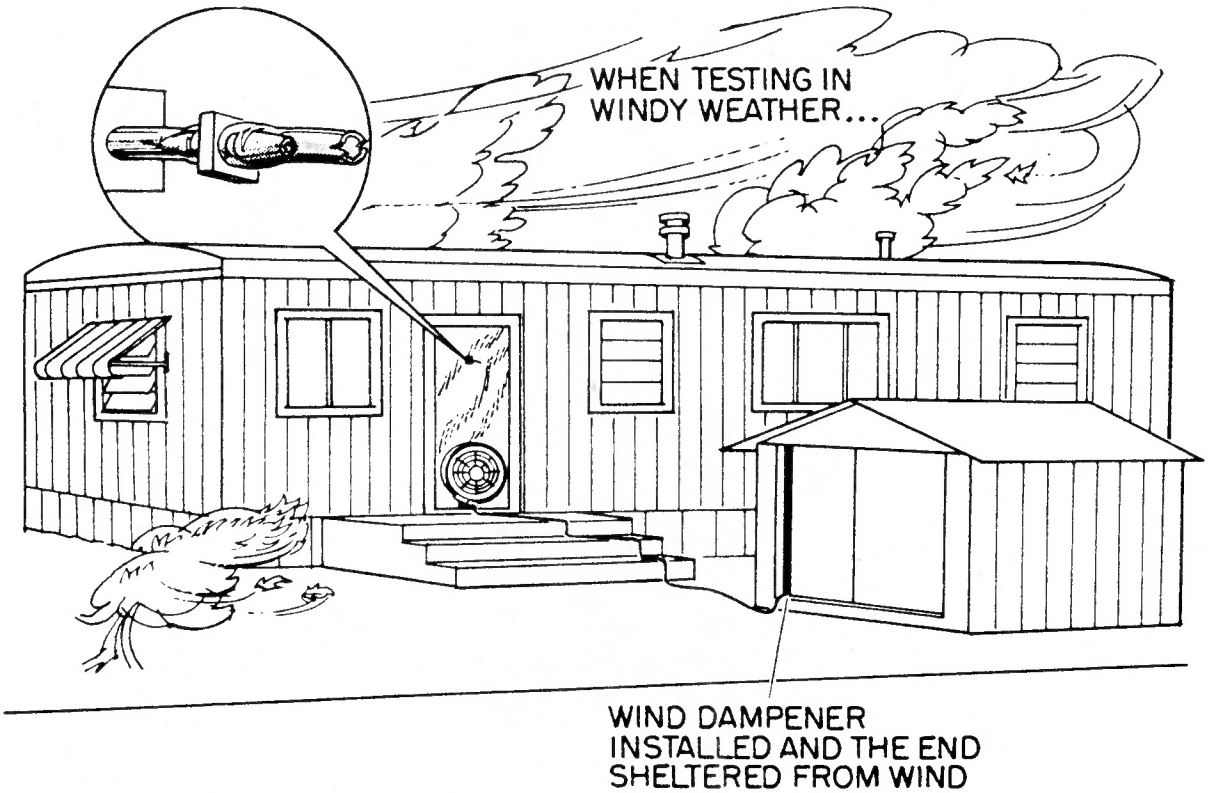

5. **MINIMUM VENTILATION REQUIREMENT**
   - **All Mobile Homes**
     - **Shell Leakage**
       - **Shall <u>not</u> be reduced below the Minimum Allowable CFM_{50} shell leakage prescribed in Appendix B.**
     - **Duct Leakage**
       - **May be reduced to zero CFM_{50} irrespective of shell infiltration.**

6. **TARGET INFILTRATION**
   - **Shell Leakage**
     - **Target shall be as prescribed by the program policies and procedures, but no lower than the Minimum Allowable CFM_{50} Shell Leakage prescribed in Appendix B.**
   - **Duct Leakage**
     - **Target is zero CFM_{50} or as prescribed in the program policies and procedures.**

7. **ECONOMIC STOP POLICY**
   - **Shell and Duct Leakage Reduction**
     - **The goal shall be to reduce leakage to Target Infiltration.**
     - **However, sealing work may stop when the crew's per-hour CFM_{50} reduction becomes less than that prescribed in Appendix A.**

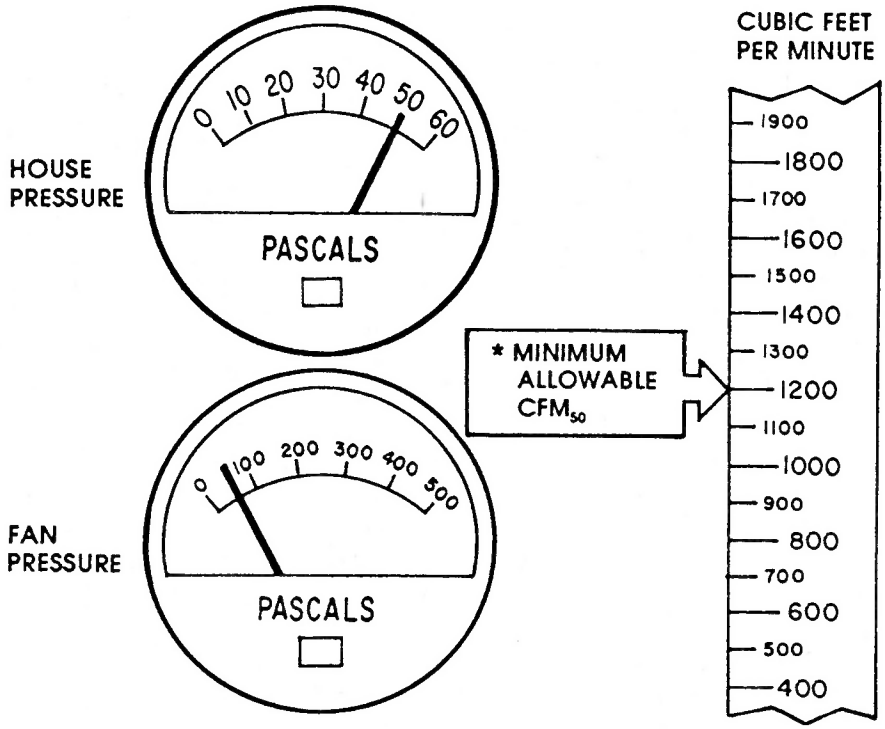

* As prescribed by the "Minimum Ventilation Requirement" charts in Appendix B.

8. **MECHANICAL VENTILATION**
   - **Gas Cook Stove is Present**
     - **An operable exhaust fan is required.**
     - **100 CFM minimum.**
   - **All Mobile Homes**
     - **Mechanical ventilation recommended when:**
       - **CFM_{50} shell leakage is below the minimum ventilation requirement.**
       - **A high moisture level is present in the home.**
     - **Ventilator**
       - **Minimum 100 CFM exhaust fan with backdraft damper.**
       - **Kitchen and bathroom locations recommended.**

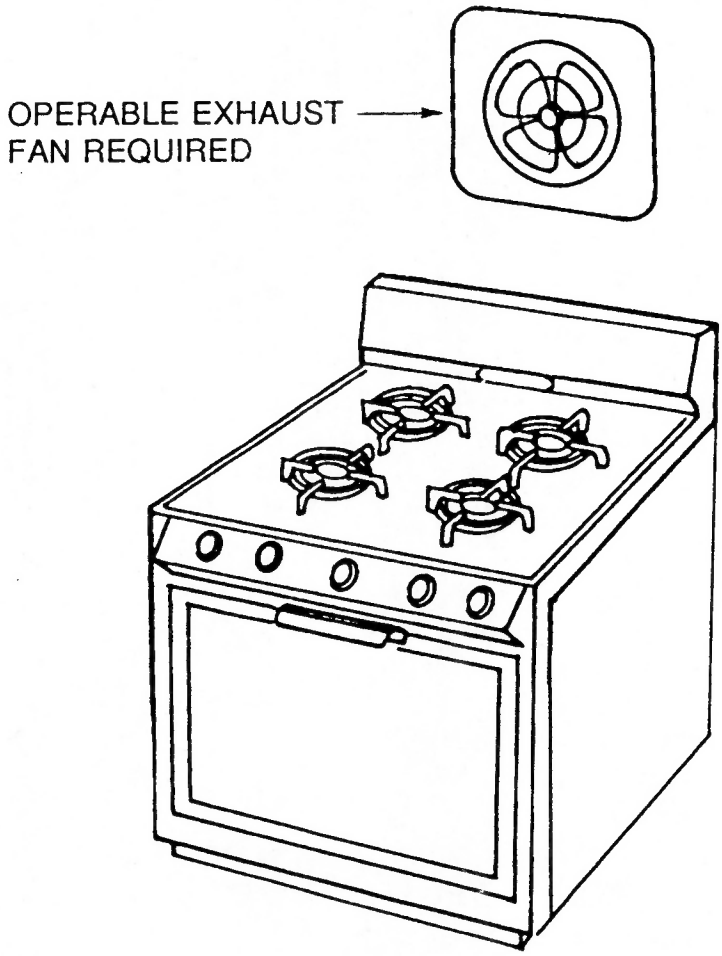

9. APPLIANCE SAFETY INSPECTION REQUIREMENTS

- **All Mobile Homes**
  - **Combustion appliances shall be checked, and required corrections shall be made as prescribed in Section 1.**

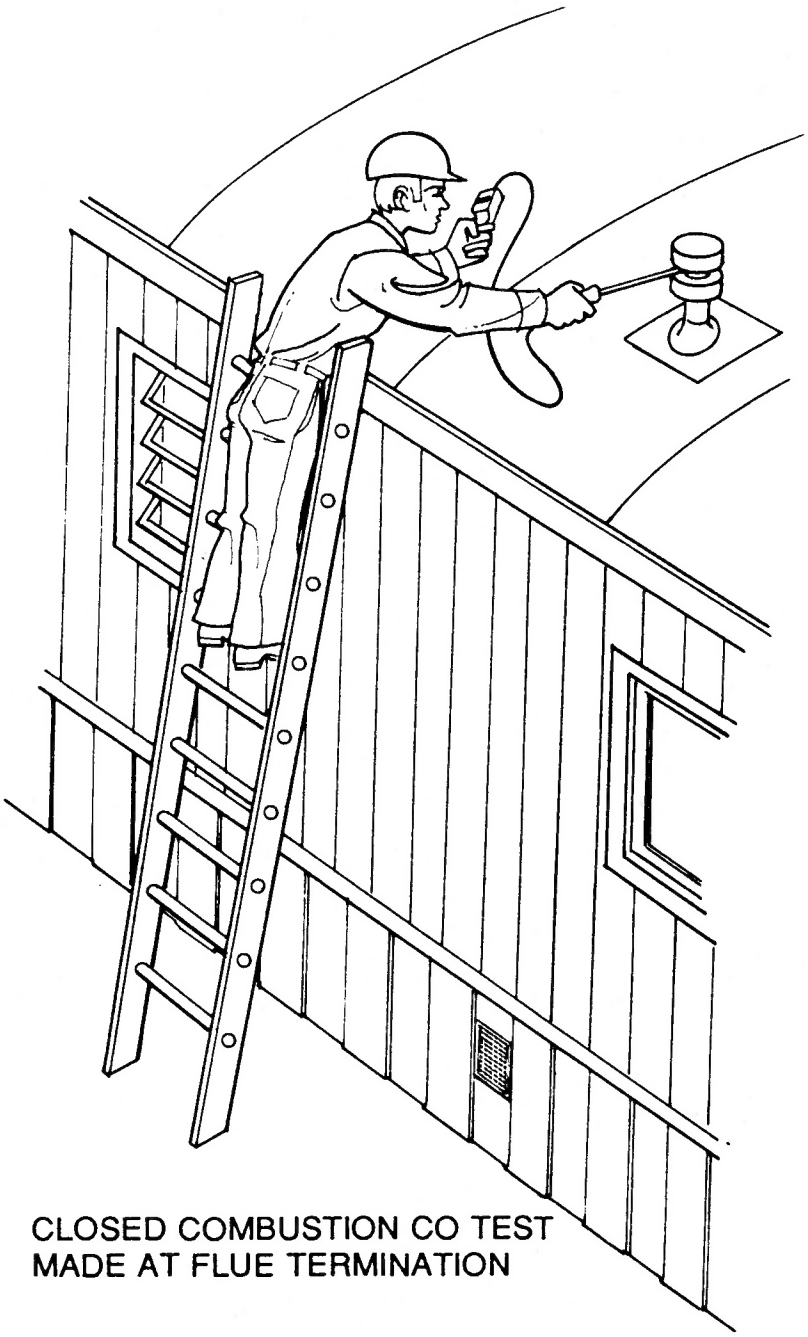

CLOSED COMBUSTION CO TEST
MADE AT FLUE TERMINATION

10. INFILTRATION REPAIR PRIORITY

- Determination of Priority
  - A blower door shall be utilized in the location and analysis of leaks in the envelope and duct system.
  - Repair priority, unless prescribed otherwise by program policies and procedures, shall be determined by feasibility and based primarily upon:
    - Leak severity.
    - Leak type and location.
    - Cost effectiveness of repair.
- General Principles of Prioritization:
  - Largest leaks shall be sealed first.
  - Catastrophic envelope leaks are highest priority when present.
  - Duct leaks are highest priority after catastrophic envelope leaks.
  - High level (ceiling) and low level (floor) repairs take precedence over mid-level leaks of equal size.
  - All repairs are governed by the Economic Stop Policy (Item 7).

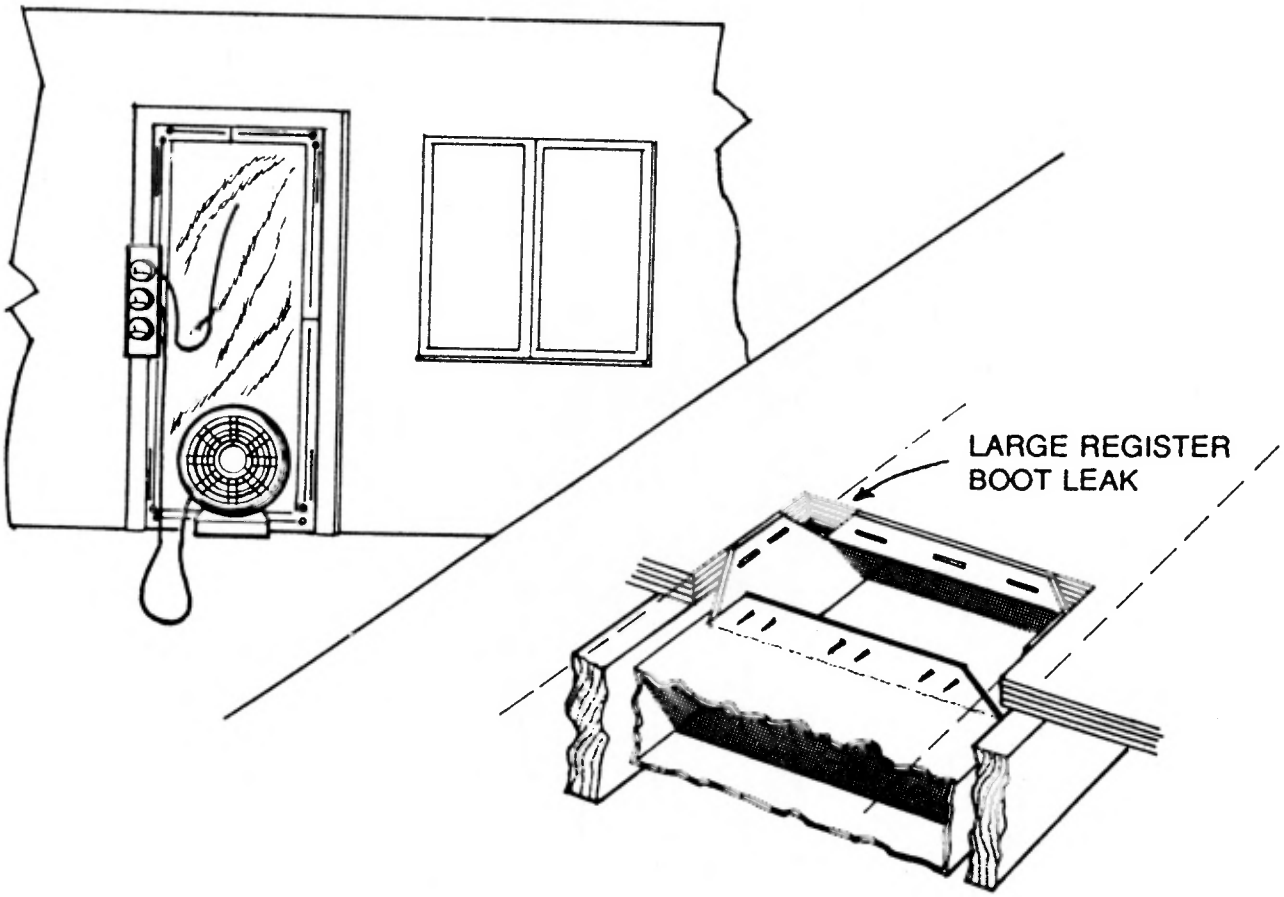

11. DUCT SYSTEM ANALYSIS AND REPAIR
   - Mobile Homes with Forced Air Systems
     - The complete supply and return duct systems shall be inspected, analyzed, and repaired as prescribed in Section 3.

12. ENVELOPE ANALYSIS AND REPAIR
   - Catastrophic Leaks
     - Leaks which prevent the house pressure from reaching an acceptable level shall be repaired or sealed temporarily before proceeding.
     - Broken glass shall be replaced in conformance with Section 6.
     - Replacement windows and doors shall be:
       - Manufactured for mobile home installation.
       - Sized to fit the opening properly.
       - Installed and secured per manufacturer's instructions.
     - Large leaks in floor, ceiling, or walls shall be repaired with compatible materials in a manner which is aesthetically pleasing in visible locations.
     - Caulking shall be installed as prescribed in Section 4.

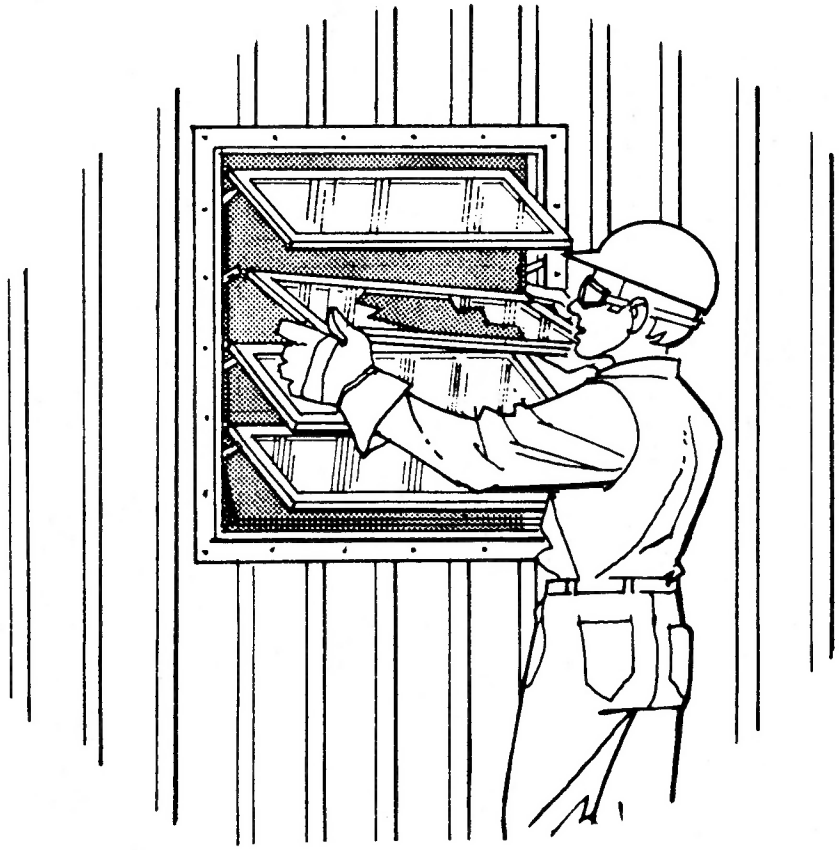

12. ENVELOPE ANALYSIS AND REPAIR (continued)

- Ceiling Bypasses at Furnace Flue
  - Existing ceiling collar shall provide a seal at the pipe and the ceiling.
    - Loose-hanging collars shall be mechanically secured against the ceiling.
    - Gaps greater than 1/16" between the pipe and collar, and between the collar and ceiling, shall be sealed with high temperature caulk.
  - When no collar is present or when gaps in the existing collar exceed 3/8":
    - A metal collar shall be fabricated using one or two pieces of galvanized sheet metal or aluminum.
    - Metal shall be a minimum of .007" thick.
    - Collar shall be secured to ceiling mechanically and sealed with high temperature caulk.
- Exhaust Fan Duct Penetrations and Similar Leaks
  - Gaps shall be filled and caulked per Section 4.
  - Metal collars used to cover large gaps shall be a minimum of .007" thick.

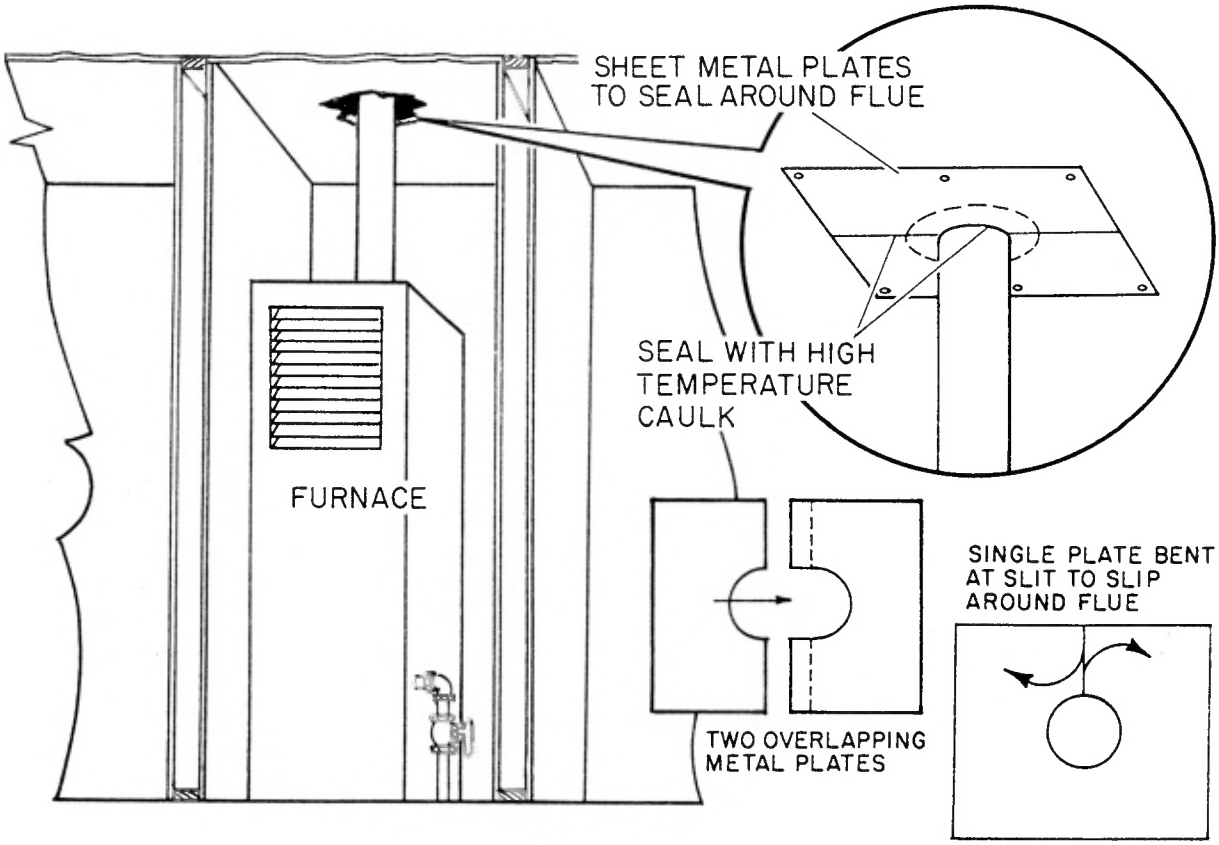

12. ENVELOPE ANALYSIS AND REPAIR (continued)

- Other Envelope Cracks and Bypasses
  - Blower door shall be utilized to locate, analyze, and repair other envelope leaks, including:
    - Plumbing and electrical penetrations, including washer hookups, bathtub/shower leaks, and electrical service panel.
    - Furnace and water heater closet leaks.
    - Hidden leaks under sinks, in cabinets and closets, especially in kitchens and bathrooms.
    - Cracks, gaps, and holes in floors, walls, and ceilings, especially joints between halves of a double-wide, around loose paneling and trim, and between the mobile and add-ons.
    - Doors between conditioned and unconditioned space.
    - Windows and leaks around window-mount appliances.

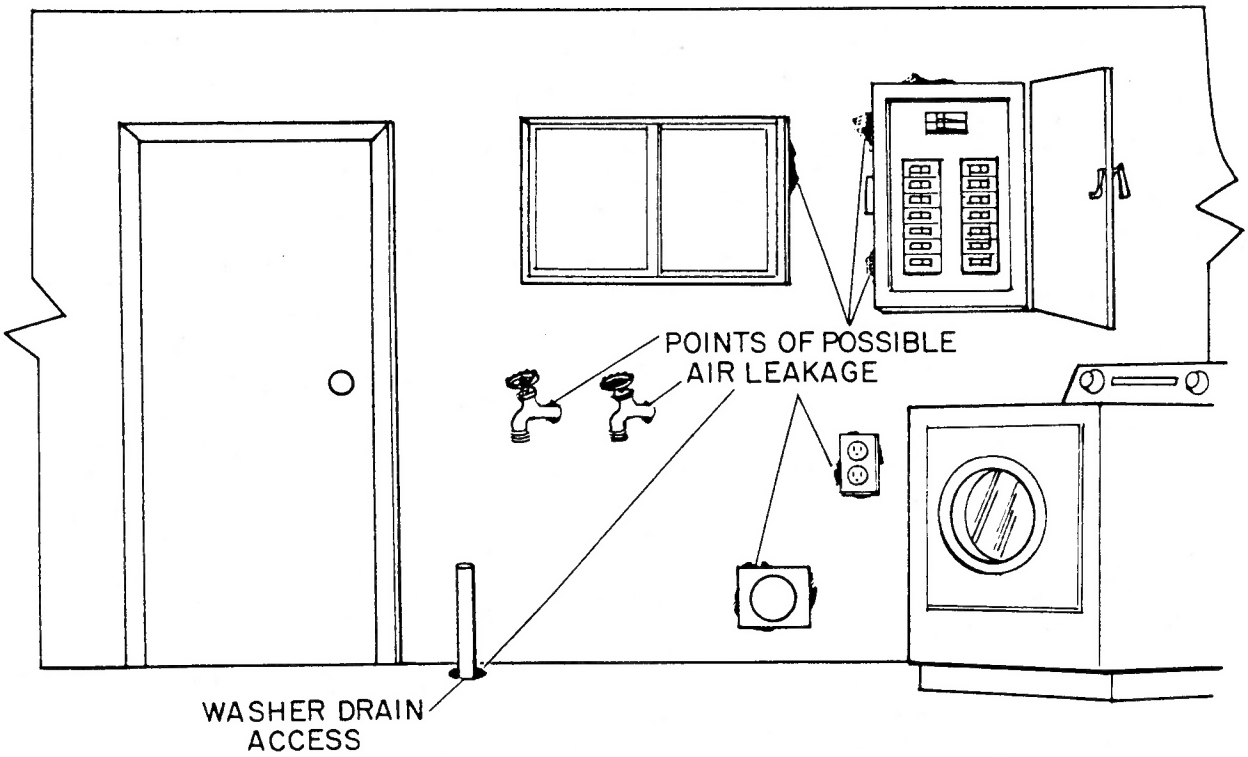

13. EVAPORATIVE COOLER AND AIR CONDITIONER COVERS
    - All Mobile Homes
        - Covers shall be installed as prescribed in Section 8.

14. CAULKING
    - All Types
        - Caulking and related envelope repairs shall be installed as prescribed in Section 4.

15. WEATHERSTRIPPING
    - Doors And Windows
        - Weatherstripping shall be installed as prescribed in Section 5.

16. ELECTRICAL OUTLET AND SWITCH GASKETS
    - All Mobile Homes
        - Gaskets shall be installed as prescribed in Section 10.

17. BELLYBOARD REPAIR
    - All Mobile Homes
        - All holes in the bellyboard (rodent barrier) created for underfloor access of the mobile home shall be repaired.
        - Pre-existing holes in the bellyboard shall be repaired.
        - Repairs shall be made as prescribed in Section 13, Item 12.

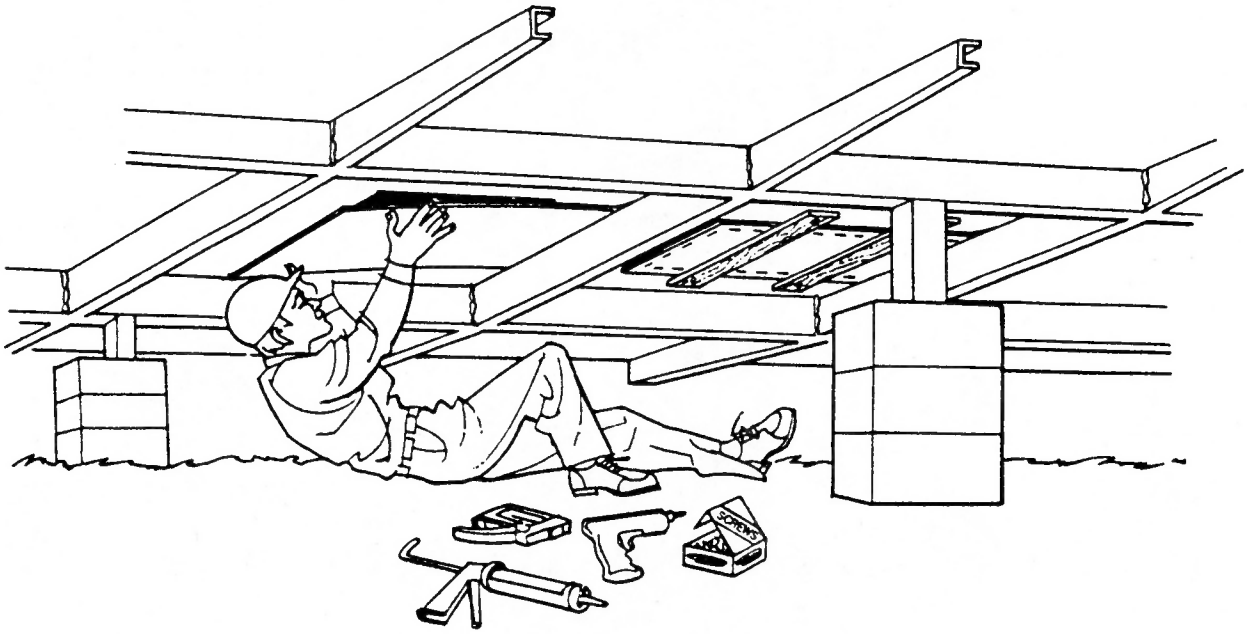

18. POST-WEATHERIZATION REQUIREMENTS
- All Mobile Homes
  - All devices which were altered or adjusted during blower door weatherization procedures shall be checked and returned to normal operation, including:
    - Pilot lights, turned off or blown out, relit.
    - Thermostats on space and water heating appliances reset.
    - All temporary blockage removed.
      - Ducts and exhaust fans unsealed.
      - Evaporative cooler and air conditioner covers removed.
    - All supply registers, return grilles, and filters checked for proper operation.
    - Dampers and air controls on wood stoves reset.

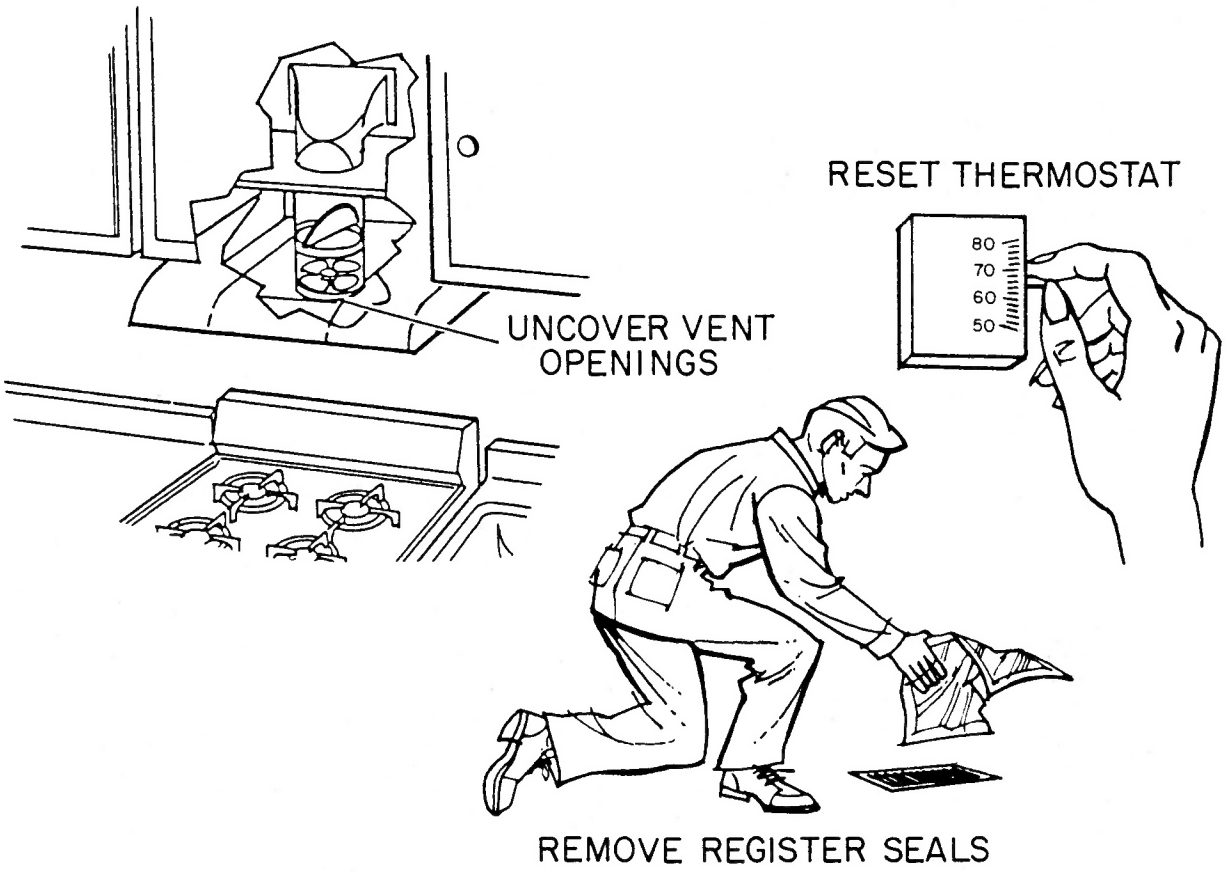

NONFEASIBILITY CRITERIA FOR BLOWER DOOR USE

1. **No exterior door will accommodate the proper installation and operation of a blower door.**

2. **Catastrophic leaks exist which require repairs exceeding the scope and limits of the weatherization program.**

SECTION 3

DUCT SYSTEM ANALYSIS AND REPAIR

PREFACE

Duct leakage is usually the single greatest cause of money-wasting energy loss in homes equipped with a forced air heating and/or air conditioning system. It can also damage the structure and jeopardize the health and safety of the occupants.

Duct leakage in the return side introduces unconditioned air into the system. This can significantly reduce operational efficiency, particularly in air conditioning and heat pump applications, thus driving up the cost of operation. Leakage into the return ducts may also cause the home to be pressurized. This wastes heat out through leaks in the envelope and forces moist heated air into wall and ceiling cavities where moisture damage can result.

Holes in the supply ducts waste conditioned air by leaking it outdoors, and depressurization of the mobile home may result. This can draw products of combustion from a poorly sealed water heater closet into the conditioned space, for example. Under extreme conditions, depressurization might even adversely affect the safe operation of the water heater or other open combustion appliances.

These facts point to the need for an integrated weatherization program which addresses both duct and envelope repairs. Other sections of this manual deal with various aspects of structural air sealing while this section addresses duct analysis and repair in detail.

The blower door is an excellent diagnostic tool for use in locating and sealing duct leaks. Hidden leaks can be quickly identified which otherwise might be missed altogether. Crew effectiveness is maximized by eliminating unnecessary "blind" sealing. The end result is a more efficiently operating forced air system which makes possible greater client comfort and reduced utility cost.

SECTION 3

DUCT SYSTEM ANALYSIS AND REPAIR STANDARDS

1. REPAIR MATERIAL
   - Mastic and Tapes
     - Maximum flame spread rating of 25, per ASTM E84-89a.
     - Exterior applications require exterior rated materials.
   - Mastic Sealant
     - All sealants shall be nontoxic and water resistant, and shall pass ASTM tests C731 (extrudability after aging) and D2202.
     - Sealants for exterior applications shall also pass ASTM C732 (artificial weathering).
   - Mesh Tape
     - Shall be minimum 9 x 9 weave per inch fiberglass mesh.
     - Shall be at least .006" thick and 2" wide.
   - Metallic Tape
     - Shall be rated for constant service up to 225°F.
     - Shall conform to UL 181 A-P.
     - Minimum thickness 4.4 mil.
     - Minimum adhesion to steel 65 ounces/inch of width, per ASTM D-1000.
   - Butyl Tape
     - Shall be rated for constant service up to 165°F.
     - Shall conform to UL STD723.
     - Minimum 2 mil aluminum backing with minimum 15 mil butyl adhesive.
   - Silicone Caulk
     - Shall conform to ASTM C920-87.

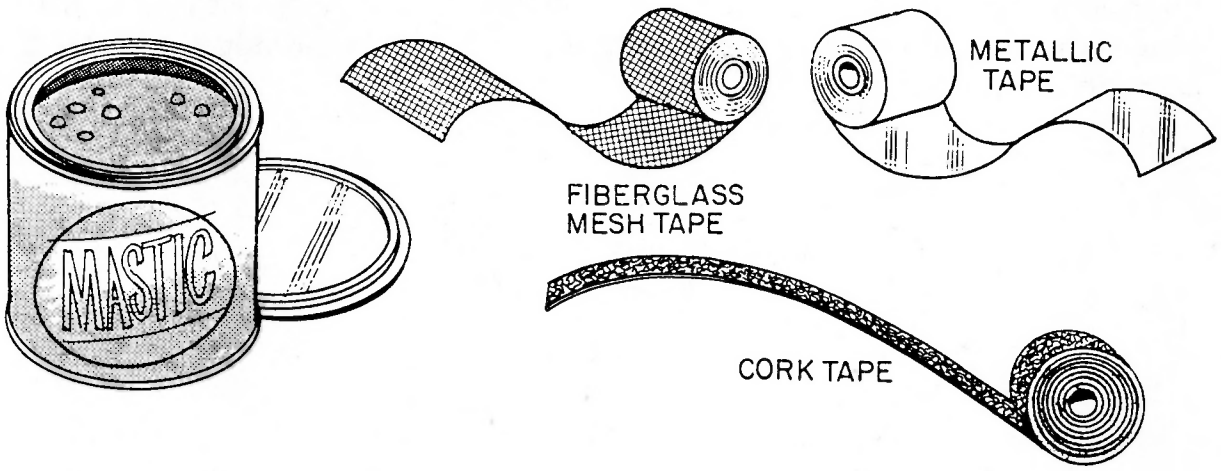

2. REPLACEMENT MATERIALS
- Supply and Return Systems
  - Ducts and dampers:
    - Shall be made of galvanized steel, tin-plated steel, or aluminum, or
    - Shall be listed Class 0 or Class 1 air ducts.
- Rigid Metal
  - Recommended material for all duct applications.
  - Shall meet the following thickness requirements:

Diameter (round)	Width (rectangular)	Minimum Gauge
Less than 12	----------	30
12" to 14"	Less than 14"	28
15" to 18"	14" to 24"	26
over 18"	25" to 30"	24
----------	over 30"	22

  - Shall be installed and supported above the ground in conformance with manufacturer's instructions and HUD MHCSS Part 3280.715 (see Item 6).
  - Insulation
    - Minimum R-4 insulation shall be installed.

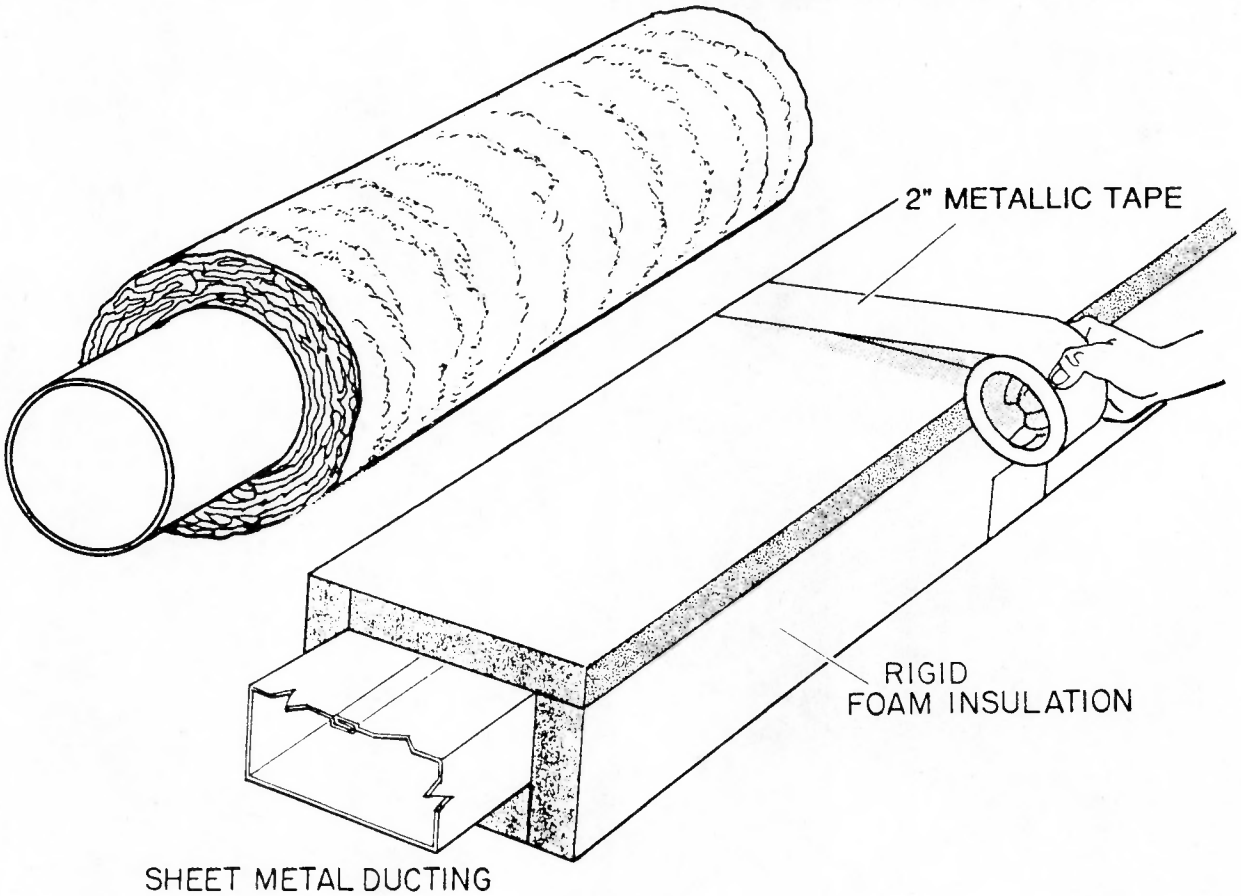

2. REPLACEMENT MATERIALS (continued)

- Flexible Metal Lined Ducts
  - May be used:
    - To replace damaged or deteriorated flexible ducts.
    - In the installation of a ducted return system.
    - Only in crawl spaces <u>not</u> accessible to animals which can physically damage ducts.
  - Shall be installed and supported above the ground in conformance with manufacturer's instructions and HUD MHCSS Part 3280.715 (see Item 6).
  - Shall comply with NFPA-90B and UL-181 Class 1.
  - Shall be rated to withstand the designated pressures and velocity of the system but <u>not</u> less than 2" WC positive pressure, $^3/_4$" WC negative pressure, and 2500 fpm velocity.
  - Shall be operable in the temperature range of 0°F to 180°F.
  - Insulating material shall have a minimum thermal resistance of R-4.0 or as jurisdiction requires.
  - Inner liner shall be fabricated with a minimum 0.0065" thick aluminum material or equivalent.
  - Vapor barrier shall have minimum 2.5 mil thickness and a maximum permeance of 1.0 perms.

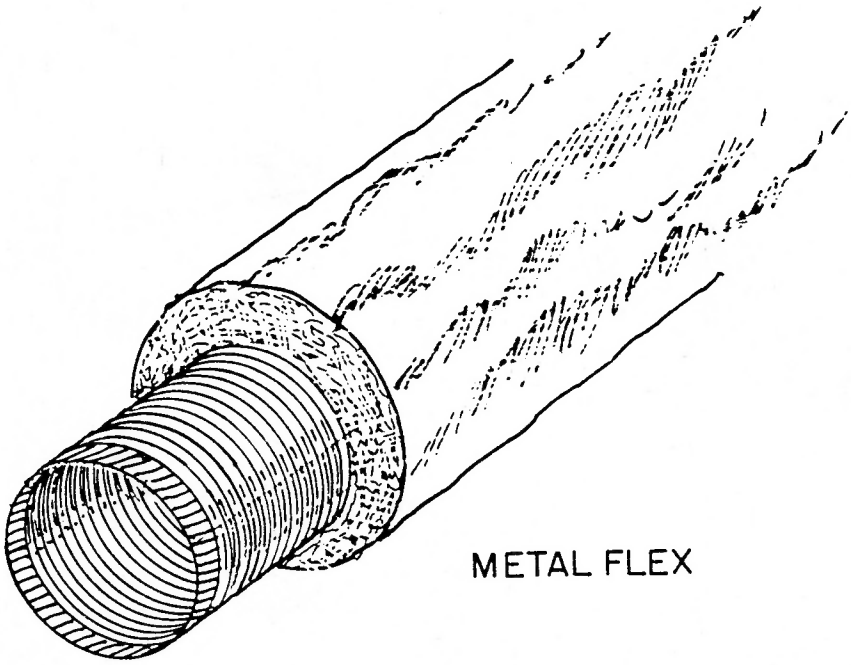

2. **REPLACEMENT MATERIALS (continued)**
   - **Flexible Nonmetallic (Plastic) Lined Ducts**
     - **May be used:**
       - **To replace damaged or deteriorated flexible plastic lined ducts.**
       - **In the installation of a new ducted return system.**
       - **Only in crawl spaces <u>not</u> accessible to animals which can physically damage ducts.**
     - **Shall be installed and supported above the ground in conformance with manufacturer's instructions and HUD MHCSS Part 3280.715 (see Item 6).**
     - **Shall comply with NFPA-90B and UL-181 Class 1.**
     - **Shall be rated to withstand the designated pressures and velocity of the system but <u>not</u> less than 2" WC positive pressure, $^3/_4$" WC negative pressure, and 2000 fpm velocity.**
     - **Shall be operable in the temperature range of 0°F to 180°F.**
     - **Insulating material shall have a minimum thermal resistance of R-4.0 or as jurisdiction requires.**
     - **Inner liner shall be fabricated with a two-ply lamination of polyester or equivalent reinforced with a spring steel helix.**
     - **Vapor barrier shall have minimum 3.5 mil thickness and a maximum permeance of 1.0 perms.**

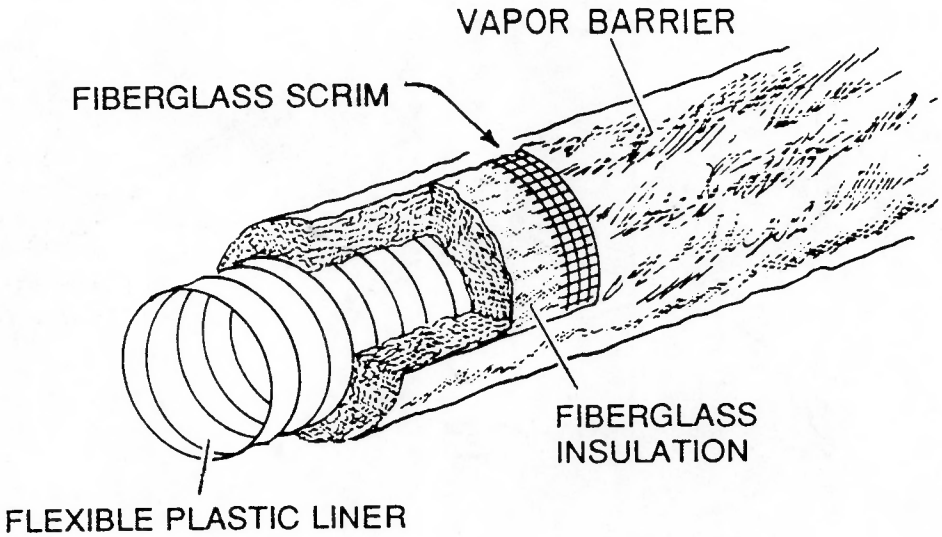

3. DUCT SEALING MATERIALS AND APPLICATIONS

- All Types
  - Duct repairs shall be performed in a manner which creates a permanent airtight seal.
  - Materials used shall be as specified in this manual.
  - Materials shall be installed in conformance with manufacturer's instructions.
  - Surfaces shall be cleaned before sealant is applied.
  - Mastic sealants shall be applied with the air handler off, unless manufacturer's instructions specify otherwise.
- Duct Mastic
  - Mastic is the preferred sealant for duct repair.
  - Mastic shall be applied a minimum of 1/8" thick unless otherwise directed by the manufacturer.
  - Mastic may be used without mesh tape to seal rigid metal cracks and gaps which:
    - Are 1/16" or smaller.
    - Do <u>not</u> require mechanical reinforcement.

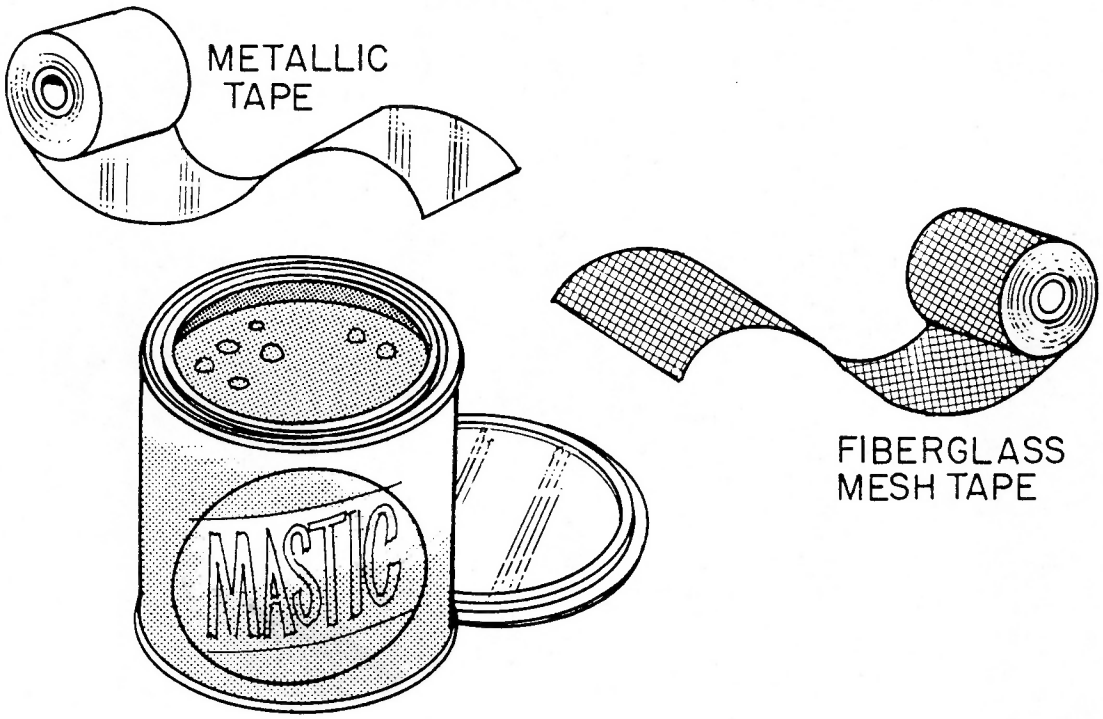

3. DUCT SEALING MATERIALS AND APPLICATIONS (continued)

- Mastic and Mesh Tape
  - Mastic and mesh tape shall be applied in alternate layers:
    - A minimum 1/8" thick layer of mastic.
    - One or more layers of mesh tape embedded into the mastic.
    - A second layer of mastic to completely cover the mesh tape.
  - Mesh tape shall be embedded into the mastic when sealing:
    - Rigid metal joints and cracks larger than 1/16"
    - Rigid metal joints 1/16" or smaller for which adequate mechanical reinforcement cannot be provided by screws.
    - Flex duct liner connections and outer vapor barriers.
    - Cracks and gaps larger than 1/16" in building cavities used as ducts.

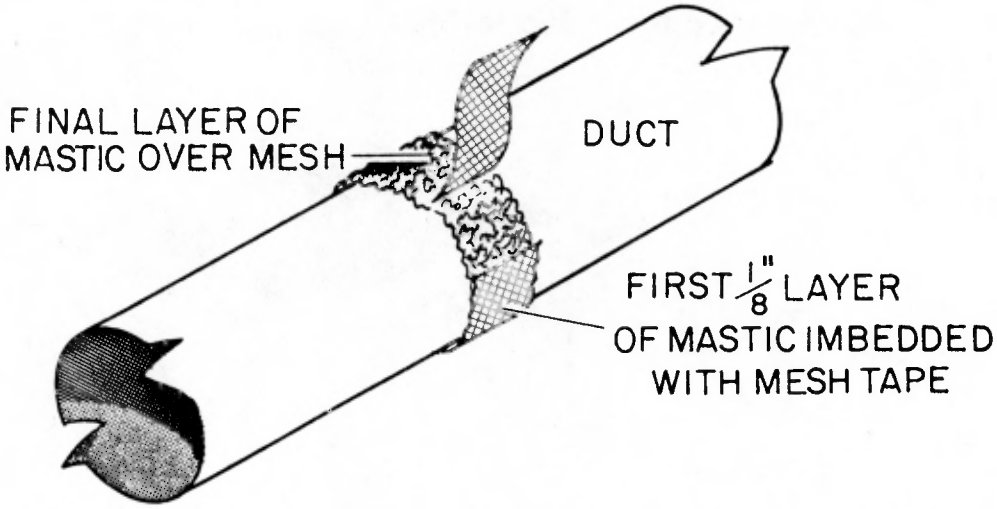

3. DUCT SEALING MATERIALS AND APPLICATIONS (continued)

- Butyl Tape
  - Shall be used when sealing cracks in rigid ducts, register boots, and plenums when the application of mesh tape and/or mastic is <u>not</u> practical.
  - May be used when sealing around the HVAC unit where extensive vibration will occur.
  - Shall be applied only to surfaces which have been cleaned; solvent recommended for metal surfaces.
- Metallic Tape
  - Shall be used when sealing cracks located:
    - Within 1" of insulated flue/vent pipe.
    - Within 6" of single wall flue/vent pipe.
  - May be used:
    - Where butyl tape is too thick, such as in register boots.
    - When sealing panels which shall be removed for servicing.
    - In lieu of mastic and mesh tape when sealing flex duct vapor barriers.
  - Shall be applied only to surfaces which have been cleaned; solvent recommended for metal surfaces.

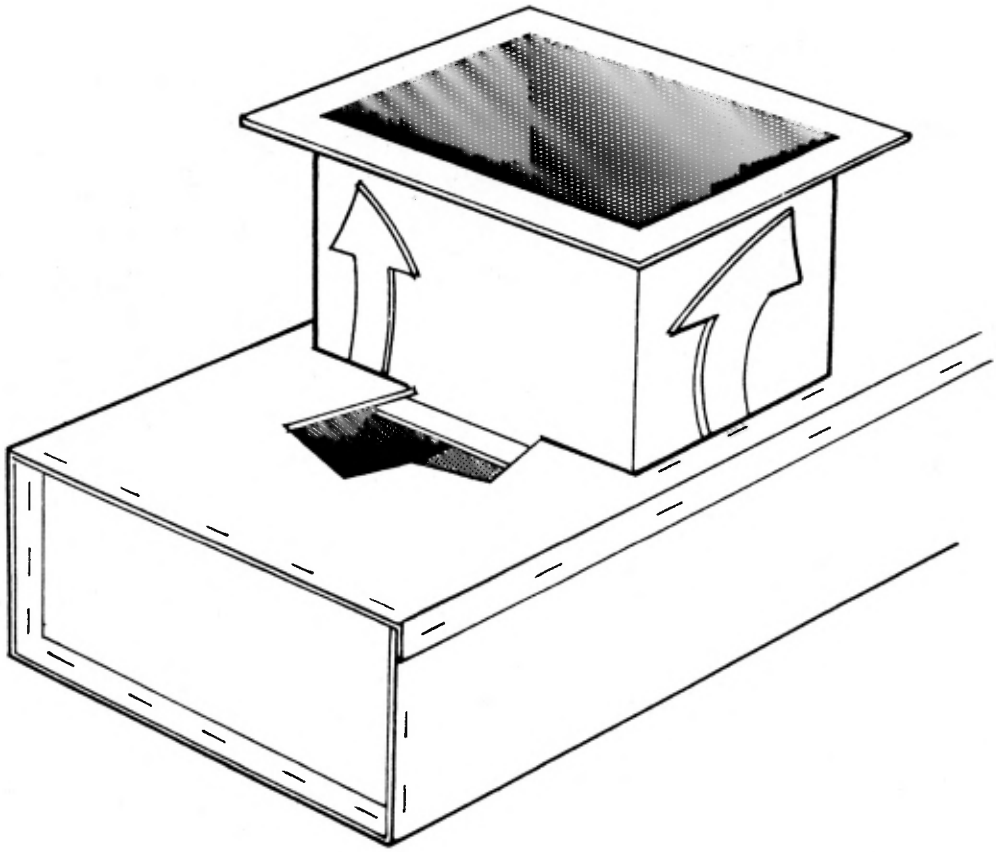

3. DUCT SEALING MATERIALS AND APPLICATIONS (continued)

- Cork Tape
  - Required for sealing gaps where refrigeration lines penetrate the plenum or cabinet.
- Silicone Caulk
  - May be used to seal gaps:
    - Around register boots where the boot attaches to adjacent sheathing (may be used in conjunction with metallic tape).
    - Formed by overlapping layers of metal, such as inside register boots and return grille boxes, when application of butyl tape or mastic and mesh tape is <u>not</u> feasible.

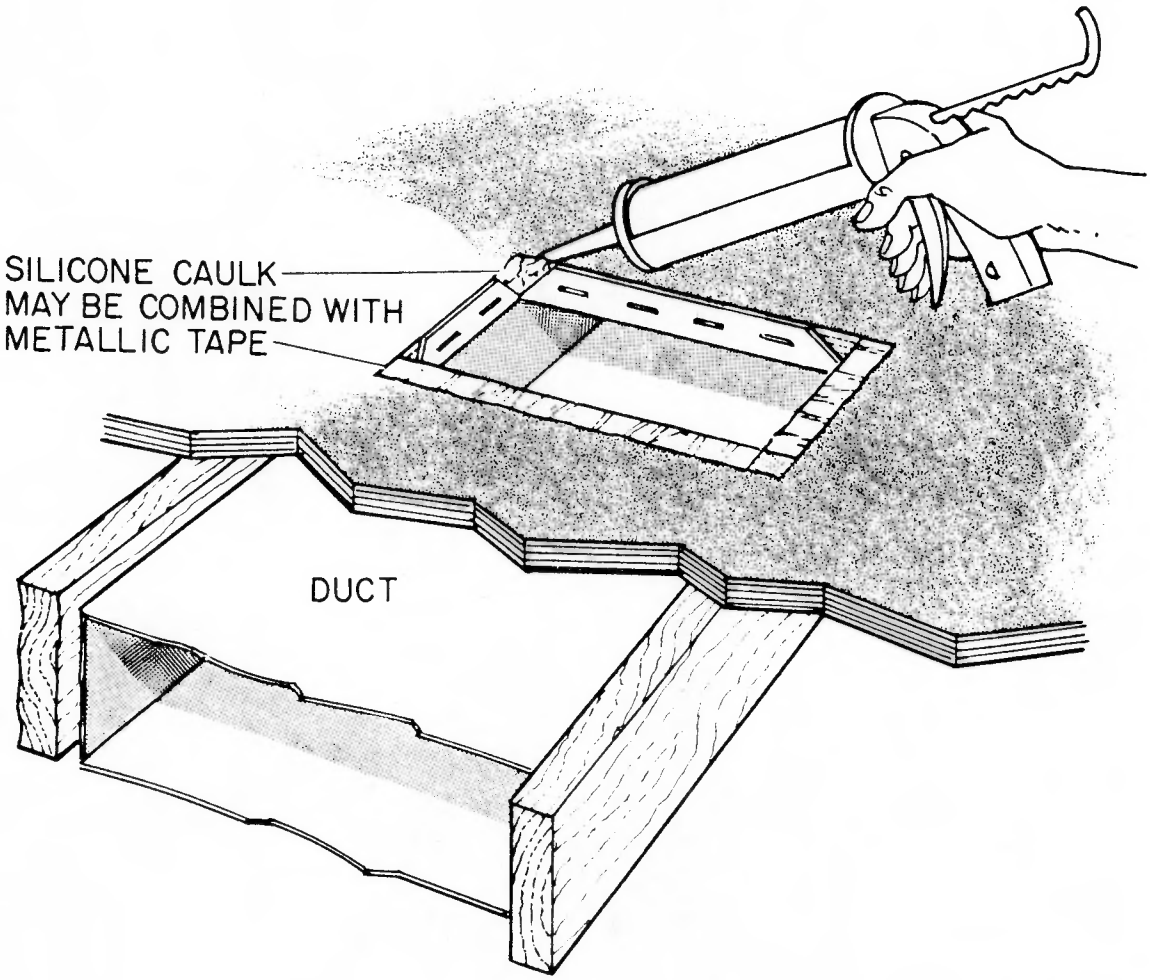

4. DUCTWORK INSPECTION ANALYSIS AND REPAIR

- All Duct Systems
  - The complete distribution and return system shall be inspected if significant leakage is shown by blower door.
- Blower Door Analysis
  - Total house leakage shall be checked before and after blocking all supply and return ducts, with the difference constituting calculated duct leakage.
  - Pressure from the blower door shall be used to detect and indicate relative magnitude of leaks in the duct system at register locations and elsewhere.
  - House pressure gauge or equivalent shall be used to detect whole-house pressurization or depressurization created by operation of the furnace air handler.

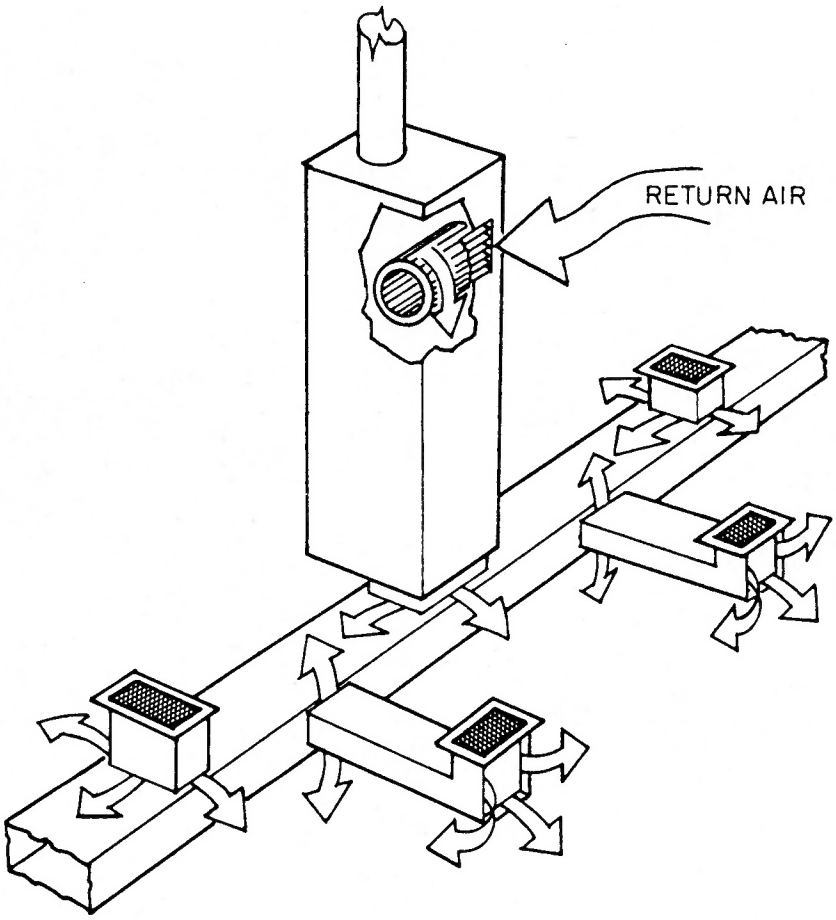

4. DUCTWORK INSPECTION ANALYSIS AND REPAIR (continued)

- Duct System Balance
  - The duct system should provide adequate air movement throughout the living space, even with room doors closed.
  - When a central return is employed:
    - The blower door house pressure gauge or equivalent shall be used to detect and measure pressurization of individual rooms caused by tight fitting doors.
    - Rooms pressurized 3 Pa or more shall be modified to provide an adequate return air path by either of the following methods:
      - Installation of uncloseable grillework in the door or wall which provides a NFV area equal to <u>not</u> less than 1 sq. in. for every 5 sq. ft. of total living area in the room.
      - Removal of 2" to $2^1/_2$" from the door bottom; however, no more than half the NFV area so created shall be counted as return air area.
  - Other corrective actions shall be performed as needed to achieve system balance, such as:
    - Removal of obstructions.
    - Opening of in-line duct dampers.
    - Repair of duct and plenum leaks.
    - Modifications by HVAC technician, such as enlargement of duct size and adjustment of blower delivery.

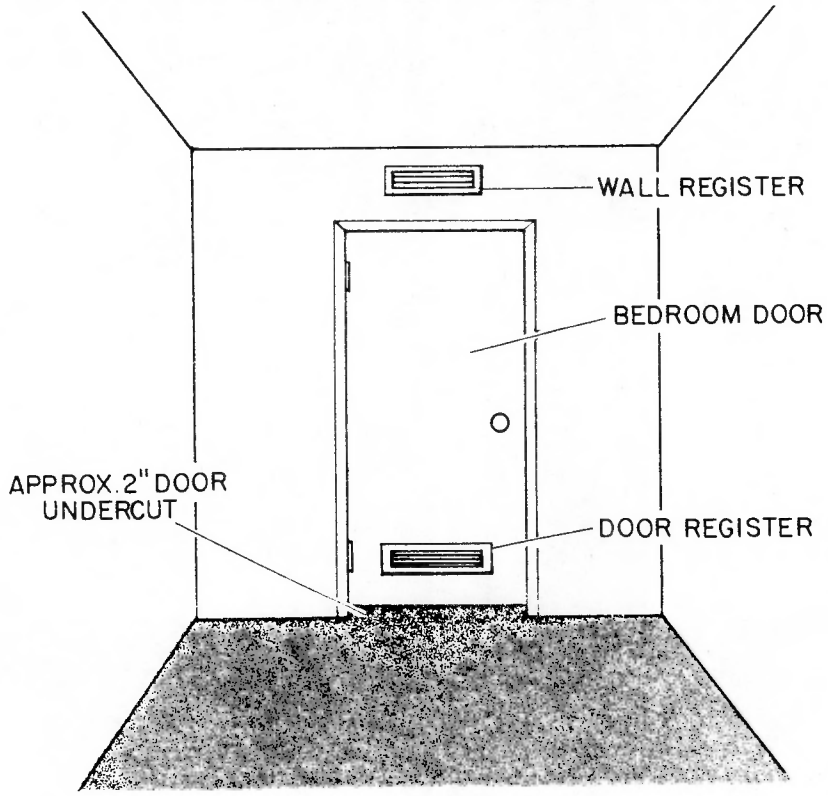

4. DUCTWORK INSPECTION ANALYSIS AND REPAIR (continued)

- Visual Inspection - Interior
  - All supply registers and return grilles shall be removed for inspection and repair procedures.
  - Mirror and strong light shall be used as needed to perform complete interior inspection of enclosed ducts.
  - Metal separations and other possible leakage sites, obstructions and other abnormalities shall be noted for repair.

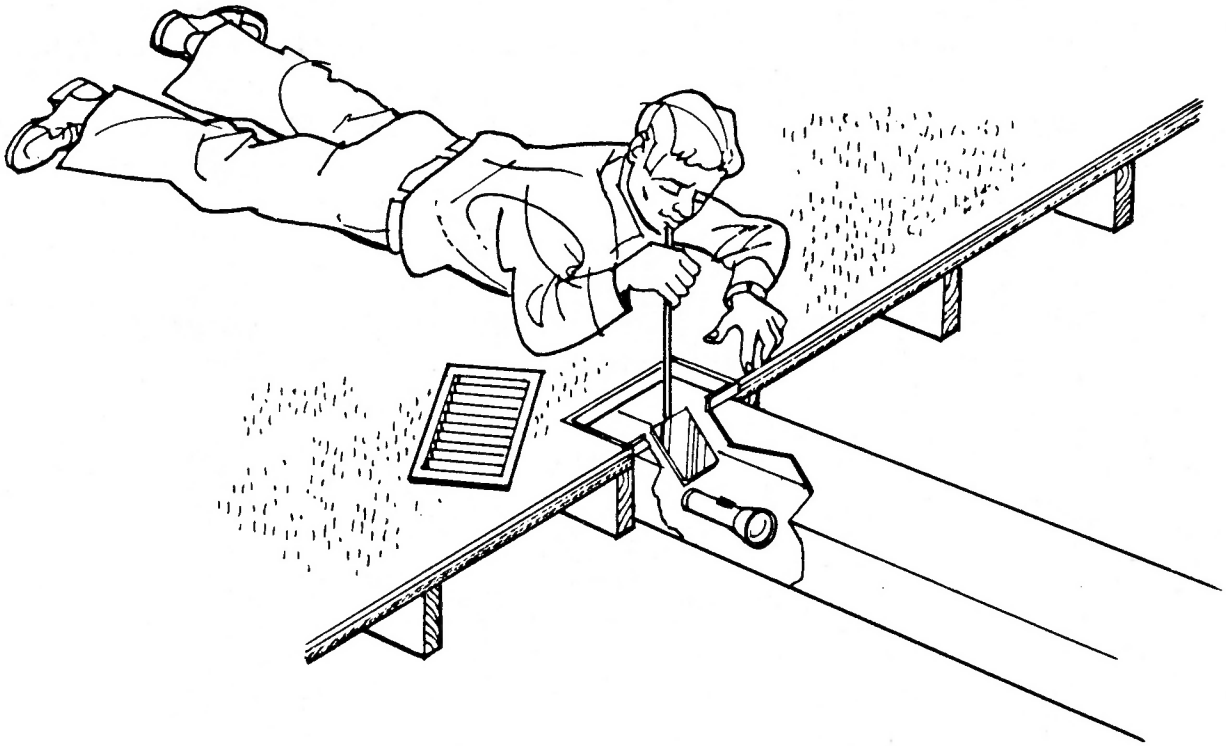

4. DUCTWORK INSPECTION ANALYSIS AND REPAIR (continued)

- Visual Inspection - Exterior
  - Visual inspection of duct work from underneath the mobile home is required if no other suitable access is available.
    - Bellyboard shall be removed as needed.
    - Bellyboard inspection and access holes shall be repaired as prescribed in Section 13, Item 12.

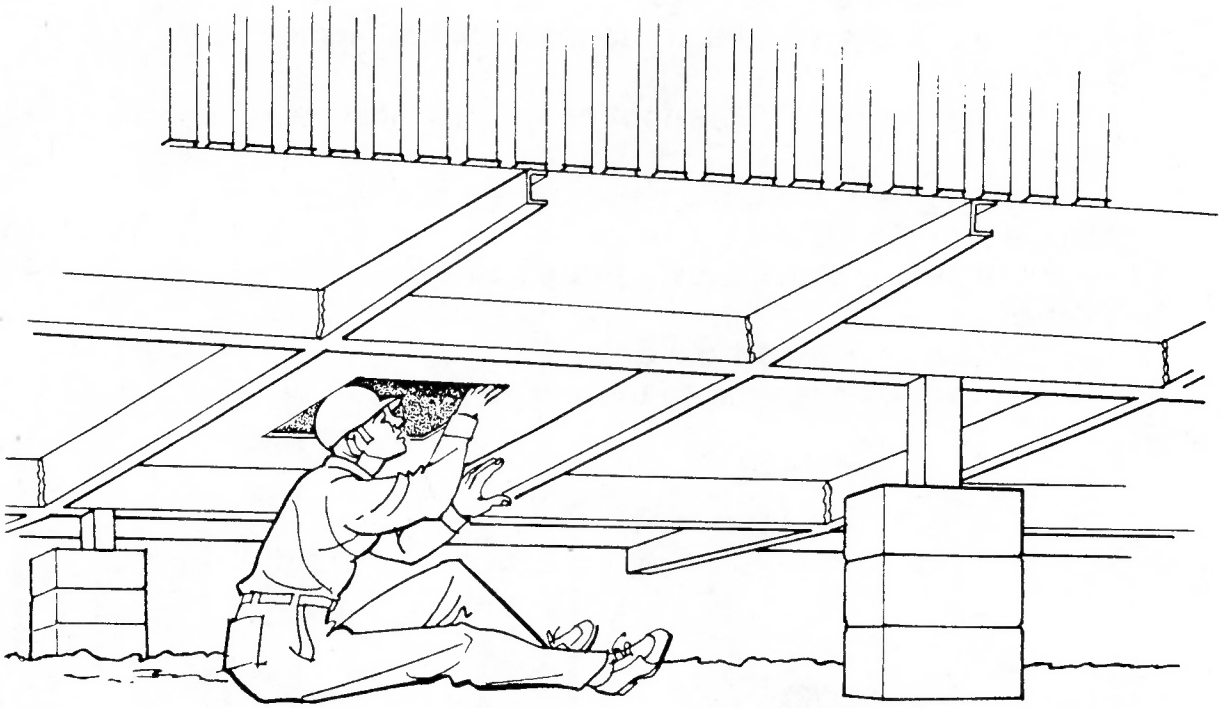

5. DUCT INSTALLATION
   - System Design
     - All ducts shall be installed and connected as prescribed in this section.
     - Unless replacing an existing duct with an equivalent, any new duct installed shall be properly sized by a qualified HVAC technician.
     - System balance is required.
       - Any new system shall be balanced.
       - House pressure gauge or equivalent shall be used to check system balance.

6. DUCT SUPPORT AND PROTECTION
   - All Types
     - Ducts shall be installed and supported above the ground:
       - In conformance with manufacturer's instructions and HUD MHCSS Part 3280.715.
       - With supports placed no more than 4' apart.
   - Flexible
     - Maximum sag 1/2" per foot of spacing between supports.
   - Rigid
     - Shall <u>not</u> flex more than 1" between supports.
   - Hangers or Saddles
     - 1 1/2" minimum width for flexible ducts.
   - Protection
     - Shall be protected from animals.
     - Shall <u>not</u> be exposed to the weather.

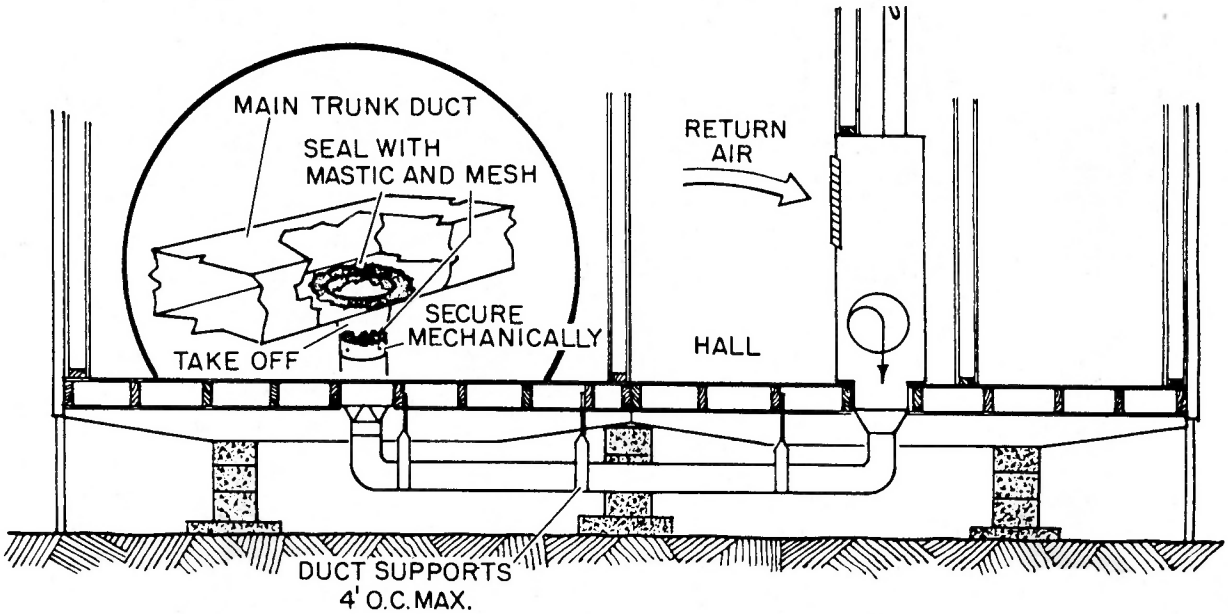

7. DUCT CONNECTIONS

- **Flexible Plastic Lined Ducts**
  - **Plastic core shall be mechanically secured to the collar or sleeve.**
  - **Minimum 20 gauge metal sleeve shall be used for joining two sections.**
  - **Clamps or cable ties shall be used to secure the liner over the collar or sleeve.**
  - **Connection shall be sealed with mastic and mesh tape.**
  - **Insulation shall completely cover sleeve and plastic core.**
  - **Vapor barrier shall be secured with cable ties or minimum 2" metallic tape.**
  - **When inner liner is air permeable, outer vapor barrier shall be secured and sealed with either of the following:**
    - **Minimum 2" metallic tape.**
    - **Cable ties, mastic, and mesh tape.**

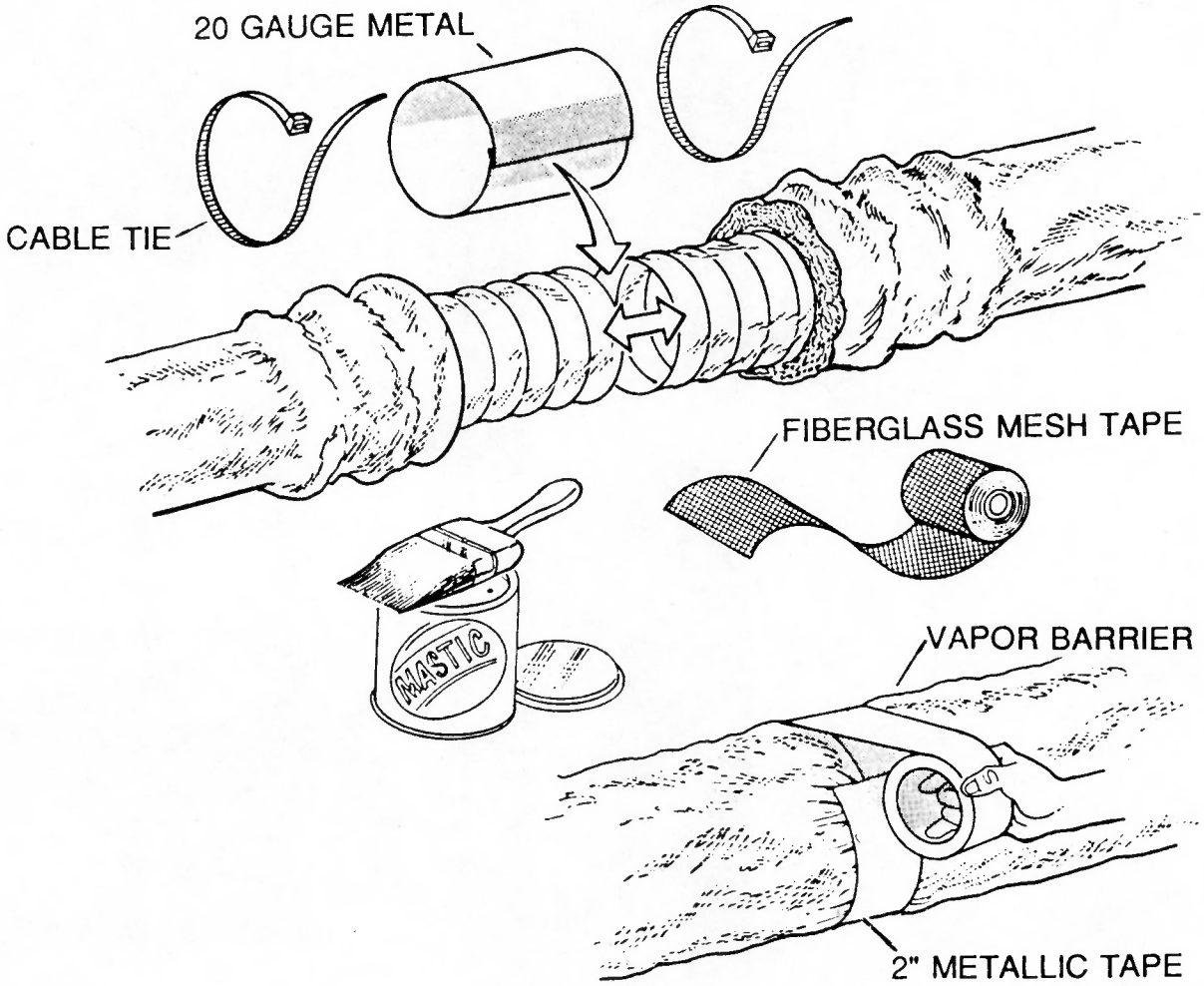

7. **DUCT CONNECTIONS (continued)**
   - **Flexible Metal**
     - **Aluminum core shall be attached mechanically to the collar or sleeve.**
       - **A minimum of 2 screws shall be used.**
       - **3 screws evenly spaced, shall be installed when accessibility allows.**
     - **Class I materials required for duct.**
     - **Sleeve shall be minimum 20 gauge if <u>not</u> part of duct.**
     - **All core connections shall be sealed with duct mastic and mesh tape or butyl tape.**
     - **Insulation shall completely cover aluminum core.**
     - **Vapor barrier shall be secured with cable ties or minimum 2" metallic tape.**

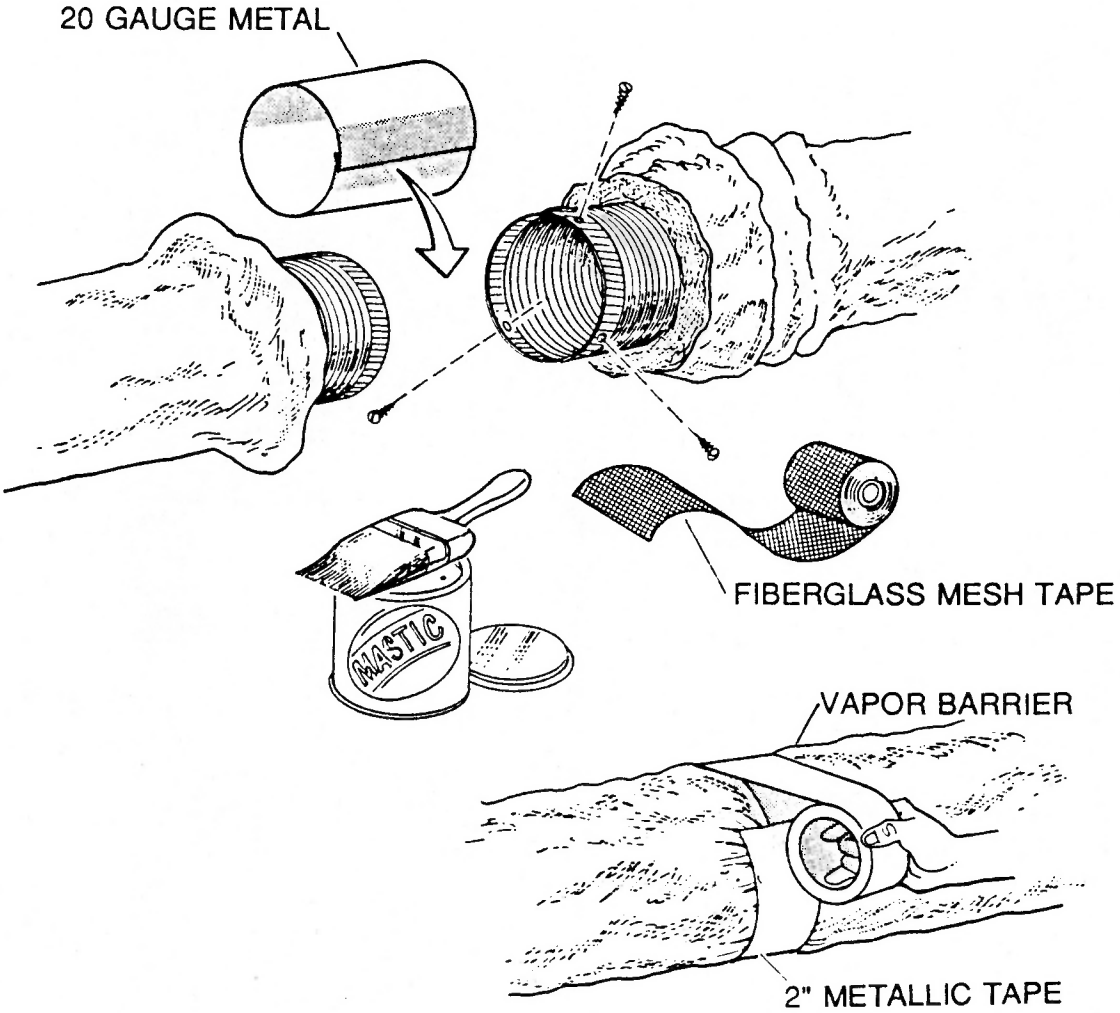

7. DUCT CONNECTIONS (continued)
- Rigid Metal Ducts and Plenums
  - Mechanical reinforcement.
    - Duct connections shall be secured mechanically.
      - Screws shall be evenly spaced around the duct when accessibility allows.
      - 3 screws on round ducts, 4 screws on rectangular ducts, shall be installed when possible.
    - Seams and overlaps with gaps over 1/8":
      - Shall be mechanically compressed where feasible before sealing.
      - Shall be reinforced and sealed with mastic and mesh tape when application of screws or other mechanical fasteners is <u>not</u> feasible.
      - Butyl tape may be used to fasten flat metal overlaps and joints, such as plenum-cabinet connections, when screws cannot be installed.
  - Sealing connections and seams.
    - Cracks and gaps 1/16" or smaller may be sealed:
      - Inside or outside the duct or plenum.
      - With butyl tape or mastic.
    - Cracks and gaps over 1/16" shall be sealed:
      - Inside or outside the duct or plenum.
      - With butyl tape or mastic and mesh tape.

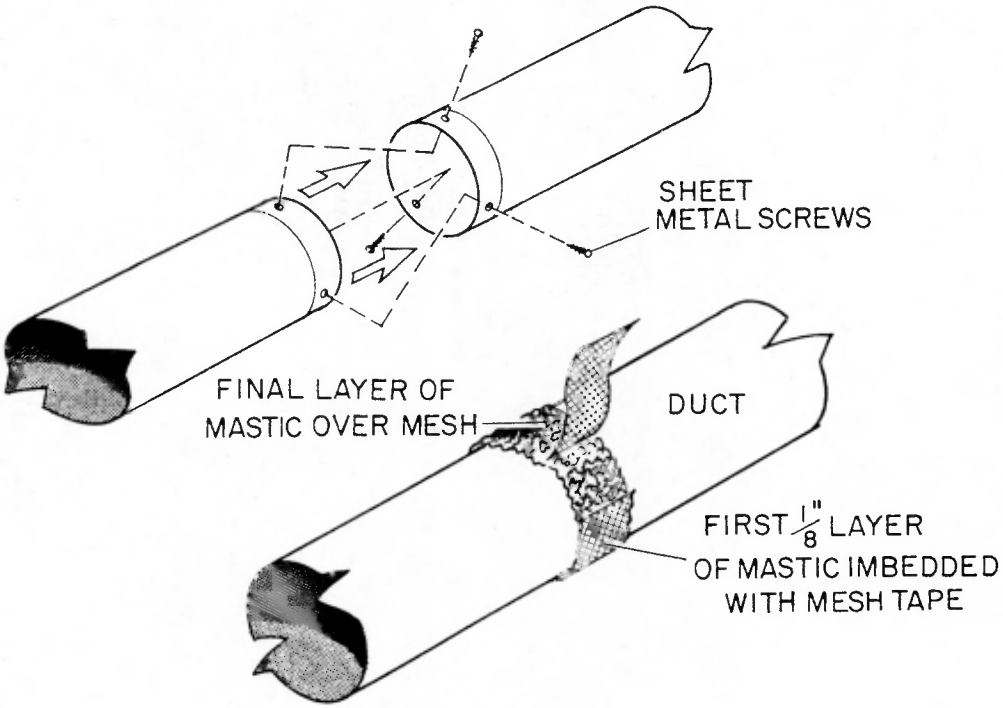

8. DUCT SYSTEM REPAIRS

- Duct Repair Priority
  - Priority shall be determined by leak location and relative size as revealed by blower door analysis and visual inspection.
  - Within the limits of the Economic Stop Policy (Section 2, Item 7), all significant leaks shall be sealed, including:
    - Return and supply paths utilizing belly or attic cavities.
    - Disconnections, metal separations, and duct penetrations by pipes and other objects.
    - Return and supply plenums and plenum-cabinet connections.
    - Crossover duct and ducted return leaks.
    - Ceiling bypasses at furnace flue penetration, especially when the enclosure is depressurized by the air handler.
    - Leaks in and around register boots, especially between boot and duct, boot and floor, and duct and floor.
    - Duct terminations (dead ends), takeoffs (starting collars), joints, connections, seams, wyes, and adjustable elbows.

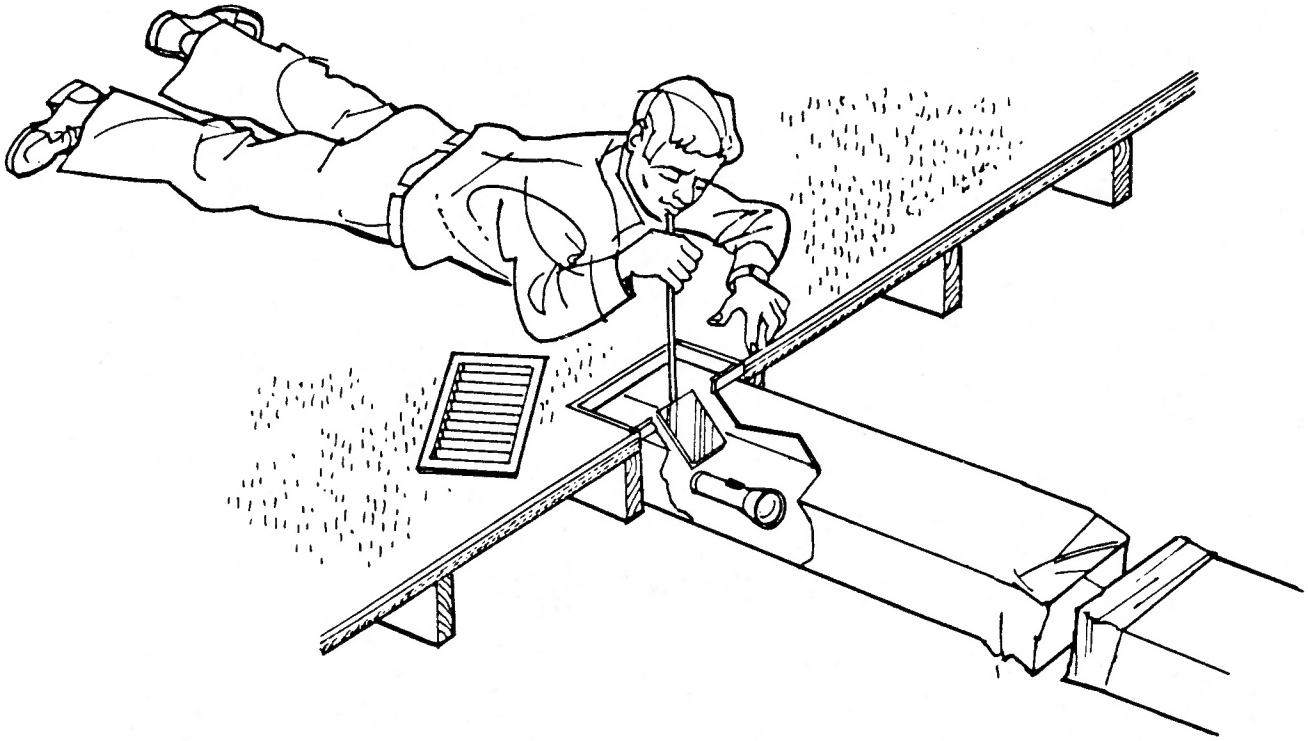

8. DUCT SYSTEM REPAIRS (continued)
   - Register Locations
     - Outer termination of boot shall be secured mechanically to surrounding material.
     - Boot termination shall be sealed to surrounding material, as needed, with:
       - Butyl tape or mastic and mesh tape where repair thickness does not prevent proper reinstallation of register.
       - Metallic tape and/or silicone caulk where a thinner repair is required.
     - All leaks inside the duct which are accessible through the register opening may be sealed from inside the mobile home with butyl tape or mastic and mesh tape.
     - Unreachable duct termination leaks shall be sealed from underneath the mobile home or blocked internally with a sheet metal dam:
       - Placed as far from the register opening as reachable.
       - Attached mechanically as feasible.
       - Attached and sealed with butyl tape and/or mastic and mesh tape, as needed, to provide a complete and permanent seal.

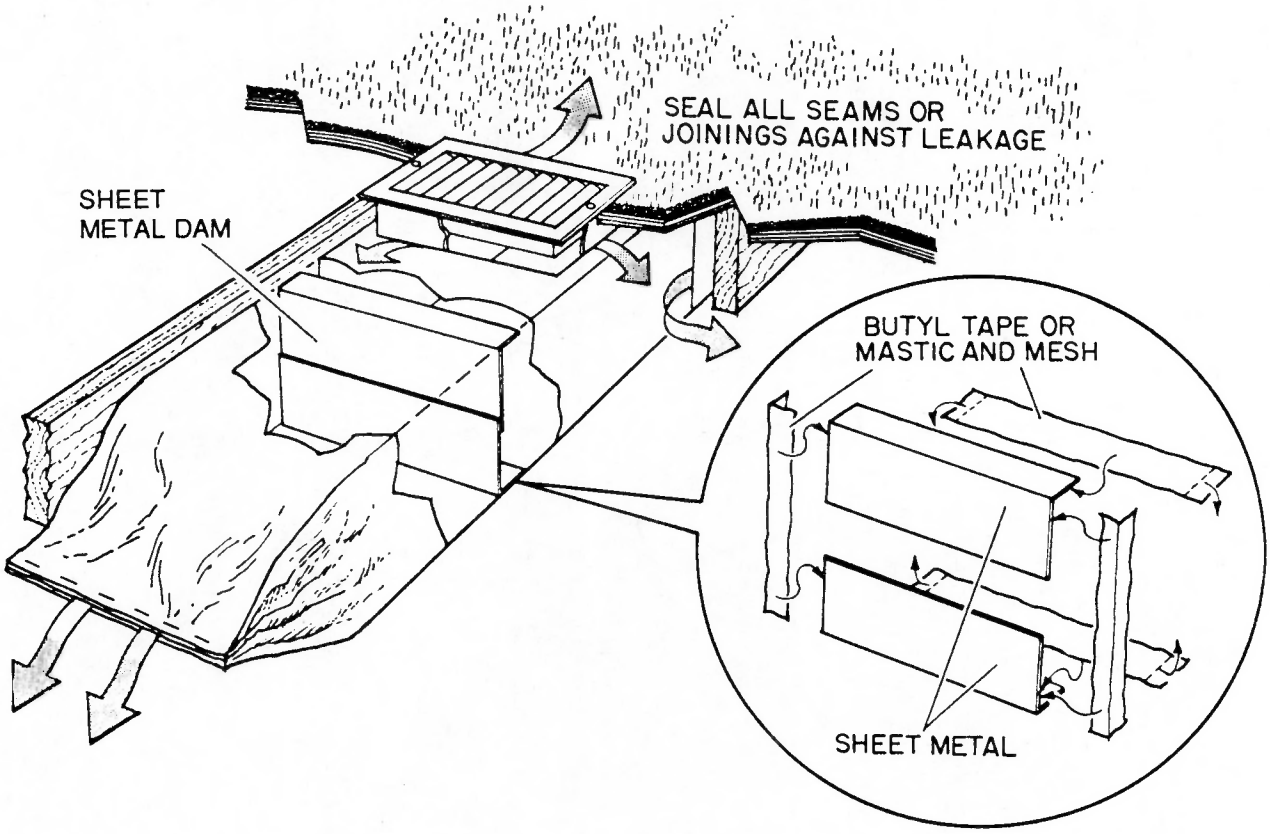

8. DUCT SYSTEM REPAIRS (continued)
   - Existing Ducted Returns
     - All accessible components shall be inspected for decay, damage, and leaks, and shall be repaired as needed.
       - Bellyboard sections shall be removed for access as needed.
     - All accessible leaks shall be repaired to create an airtight seal, including:
       - Envelope penetrations.
       - Seams, connections, and joints throughout the entire return system, including duct-plenum and plenum-cabinet connections.
     - Bellyboard access holes shall be repaired as prescribed in Section 13, Item 12.

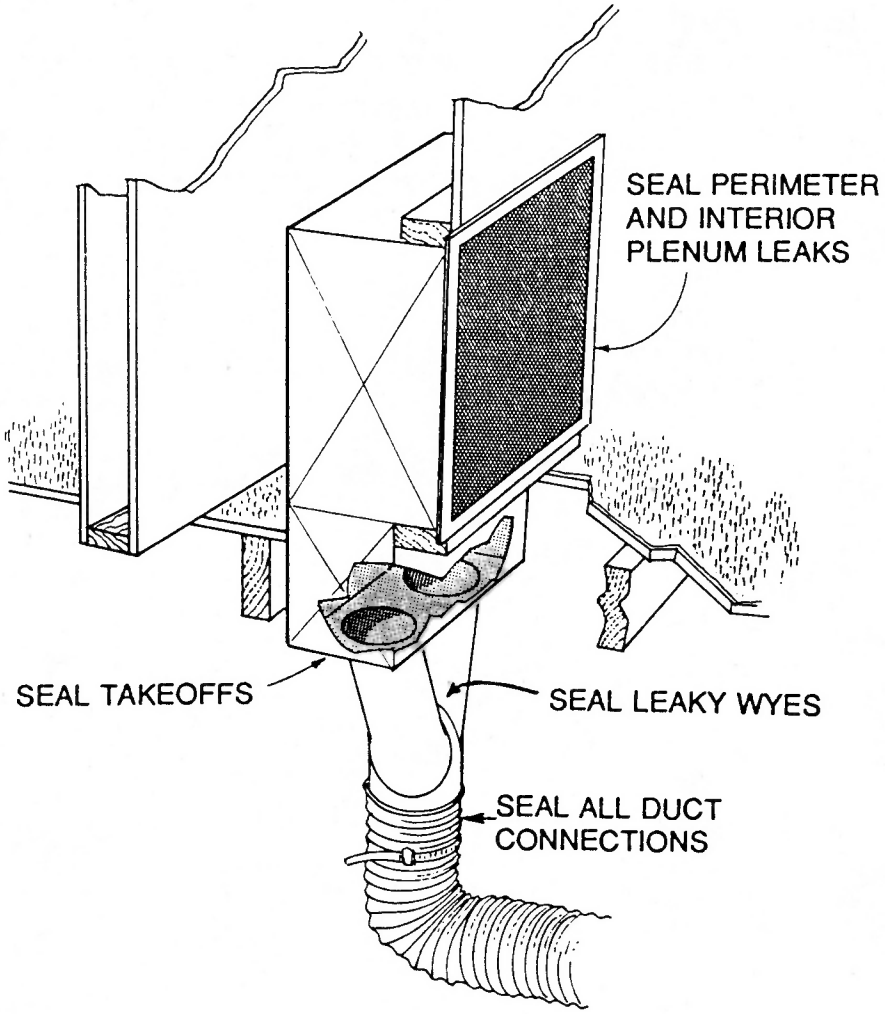

8. DUCT SYSTEM REPAIRS (continued)
   - Crossover Ducts
     - Existing crossover systems shall be inspected for decay, damage, disconnections, and leaks.
     - All repairable leaks shall be sealed as prescribed in this section.
     - All irreparable components shall be replaced.
       - Rigid metal duct recommended.
       - Ducts shall be installed, supported, and sealed as prescribed in this section.

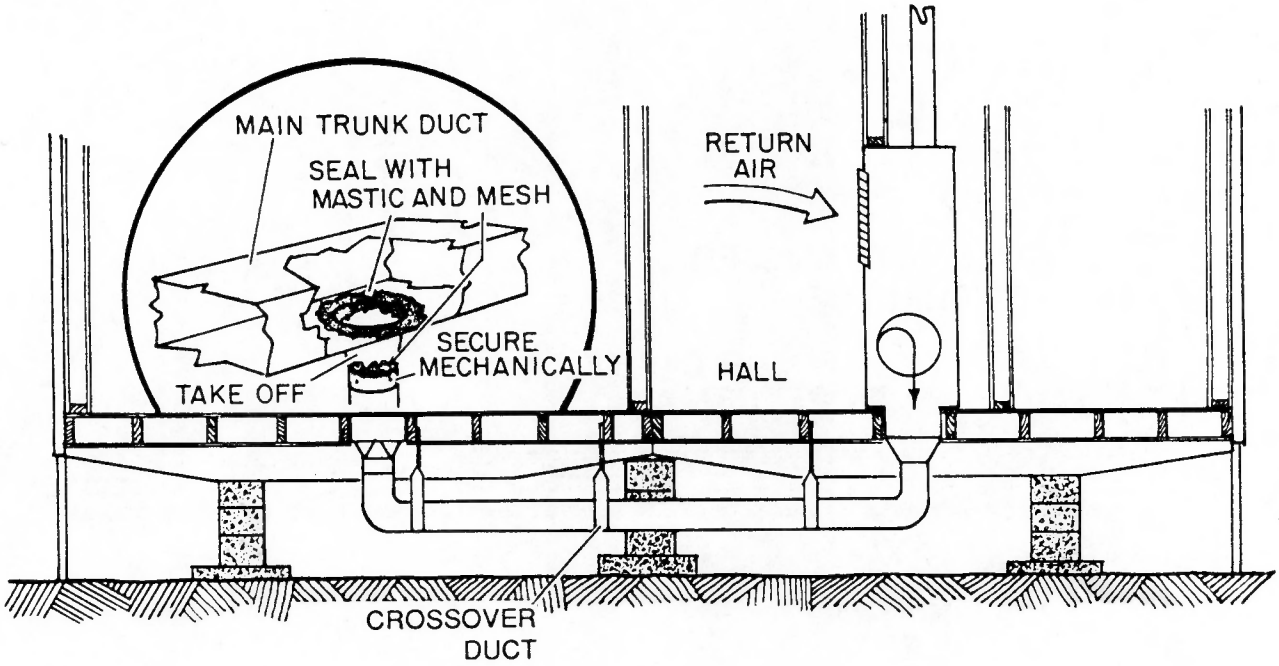

9. NEW CENTRAL RETURN

- Upflow Furnace with Belly Cavity Return
  - A new ducted return shall be installed, supported, and sealed as prescribed in this section, unless sealing the existing belly return is feasible.
  - The system shall:
    - Be properly sized by a qualified HVAC technician.
    - Provide a balanced air flow throughout the mobile home.
  - When a new central return is installed:
    - The existing belly cavity return shall be abandoned.
    - The abandoned register openings shall be blocked off and permanently sealed.

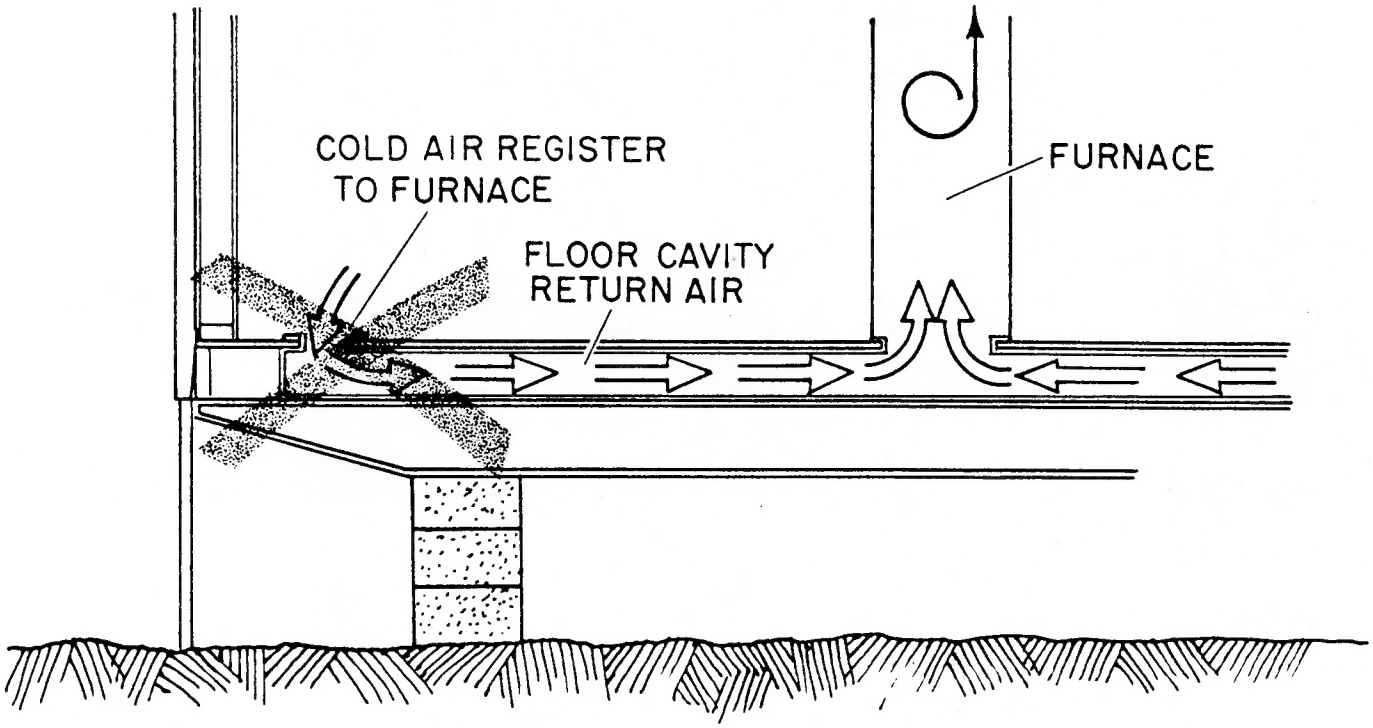

9. NEW CENTRAL RETURN (continued)
   - Upflow Furnace with Belly Cavity Return (continued)
     - The return grille shall be:
       - Sized to provide a minimum of 2 sq. in. of NFV area for each 1,000 Btu/hr furnace input capacity.
       - Installed in the outside wall of a closet when possible or in the floor.
       - Located in a hallway or other open area.
       - Centrally located within the mobile home.
     - Proper air flow shall be provided for each room containing a supply register utilizing one of the following methods:
       - An uncloseable grille may be installed in the door or wall which provides a NFV area equal to <u>not</u> less than 1 sq. in. for every 5 sq. ft. of total living area in the room.
       - 2" to $2^1/_2$" may be removed from the door bottom; however, no more than half the NFV area so created shall be counted as return air area.
     - System balance shall be checked and modifications shall be made as needed to provide proper balance.

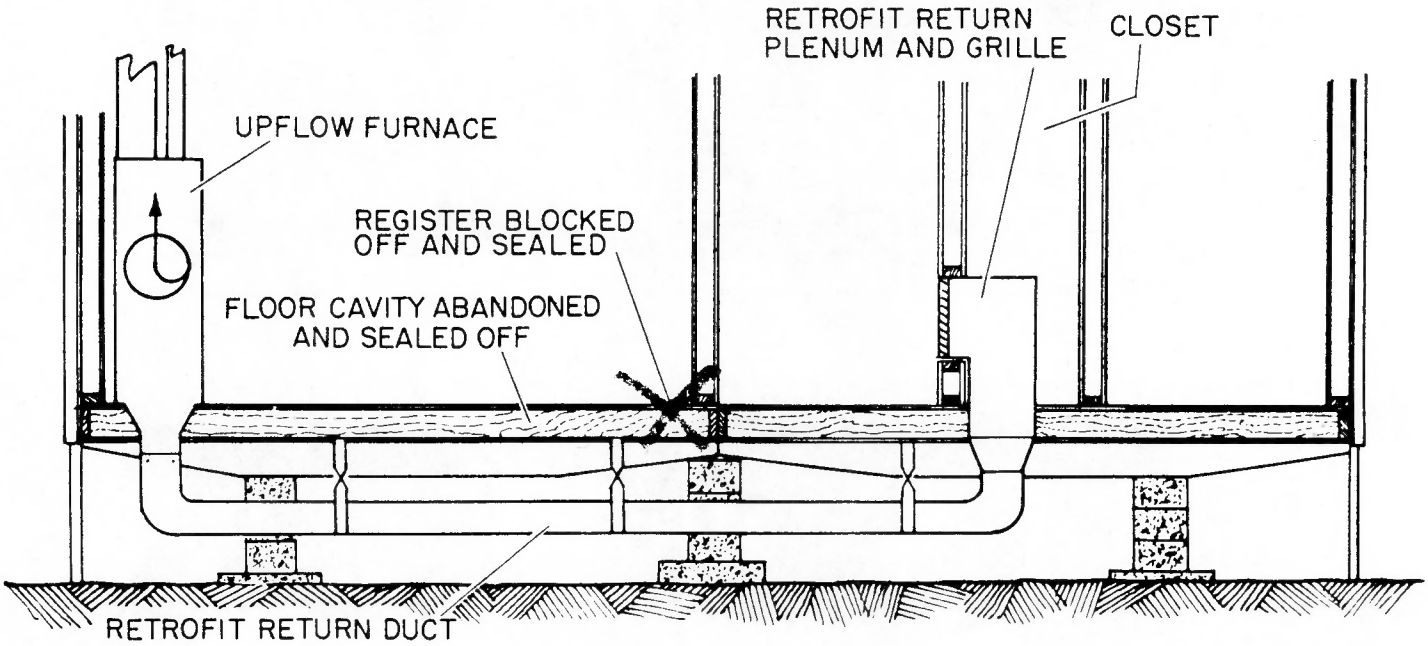

9. NEW CENTRAL RETURN (continued)

- Downflow with Belly or Roof Cavity Return
  - Leaky return shall be abandoned when repair is <u>not</u> feasible.
  - Existing return air path and all abandoned register openings shall be blocked off and permanently sealed.
  - The furnace enclosure and/or cabinet shall be modified to provide a retrofit central return path of adequate size.
    - A return grille shall be installed when appropriate.
    - Grille shall have a minimum 2 sq. in. of NFV area for each 1,000 Btu/hr. furnace input capacity.
  - Proper air flow shall be provided for each room containing a supply register utilizing one of the following methods:
    - An uncloseable grille may be installed in the door or wall which provides a NFV area equal to <u>not</u> less than 1 sq. in. for every 5 sq. ft. of total living area in the room.
    - 2" to $2^1/_2$" may be removed from the door bottom; however, no more than half the NFV area so created shall be counted as return air area.
  - System balance shall be checked and modifications shall be made as needed to provide proper balance.

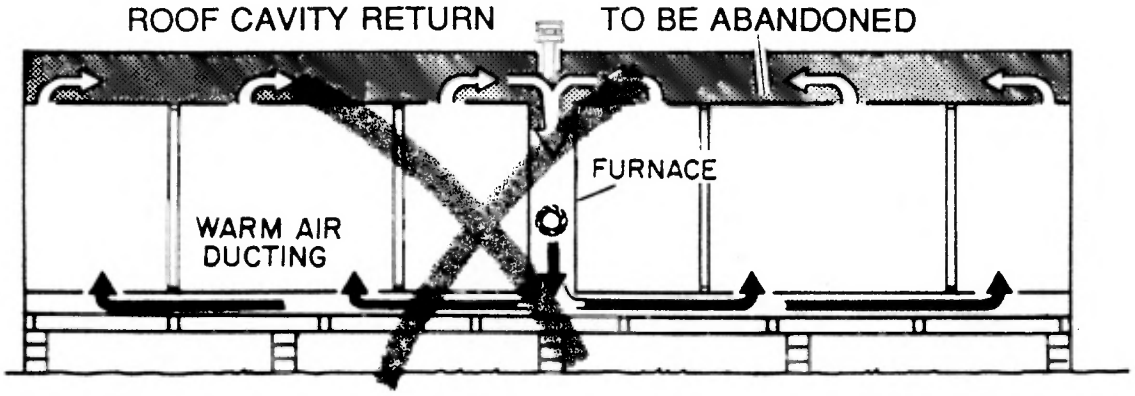

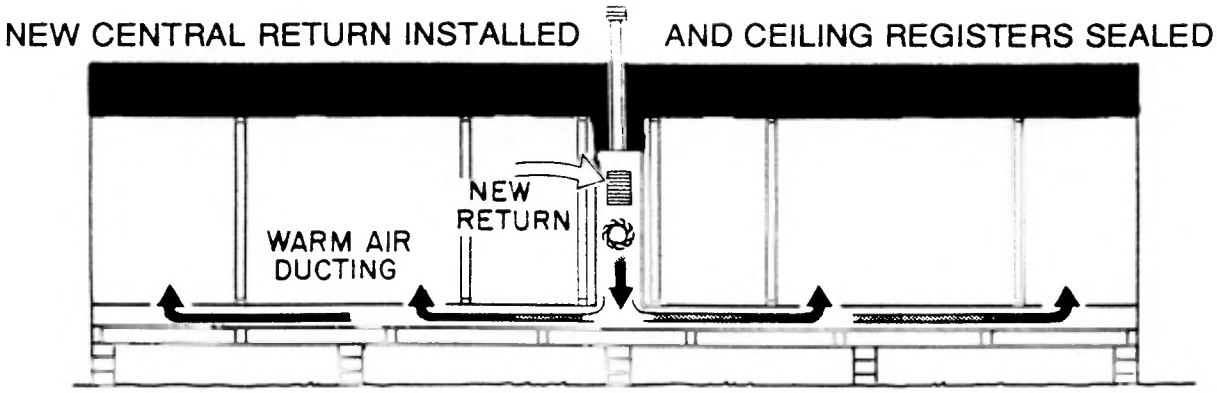

10. REGISTER GRILLES

- **Repair and Replacement**
  - **Damaged registers which do <u>not</u> allow proper airflow shall be repaired if feasible or replaced.**
  - **Dampers shall function and be capable of staying open as needed.**
  - **Dampers which will <u>not</u> open or stay open shall be removed if register replacement is <u>not</u> feasible.**

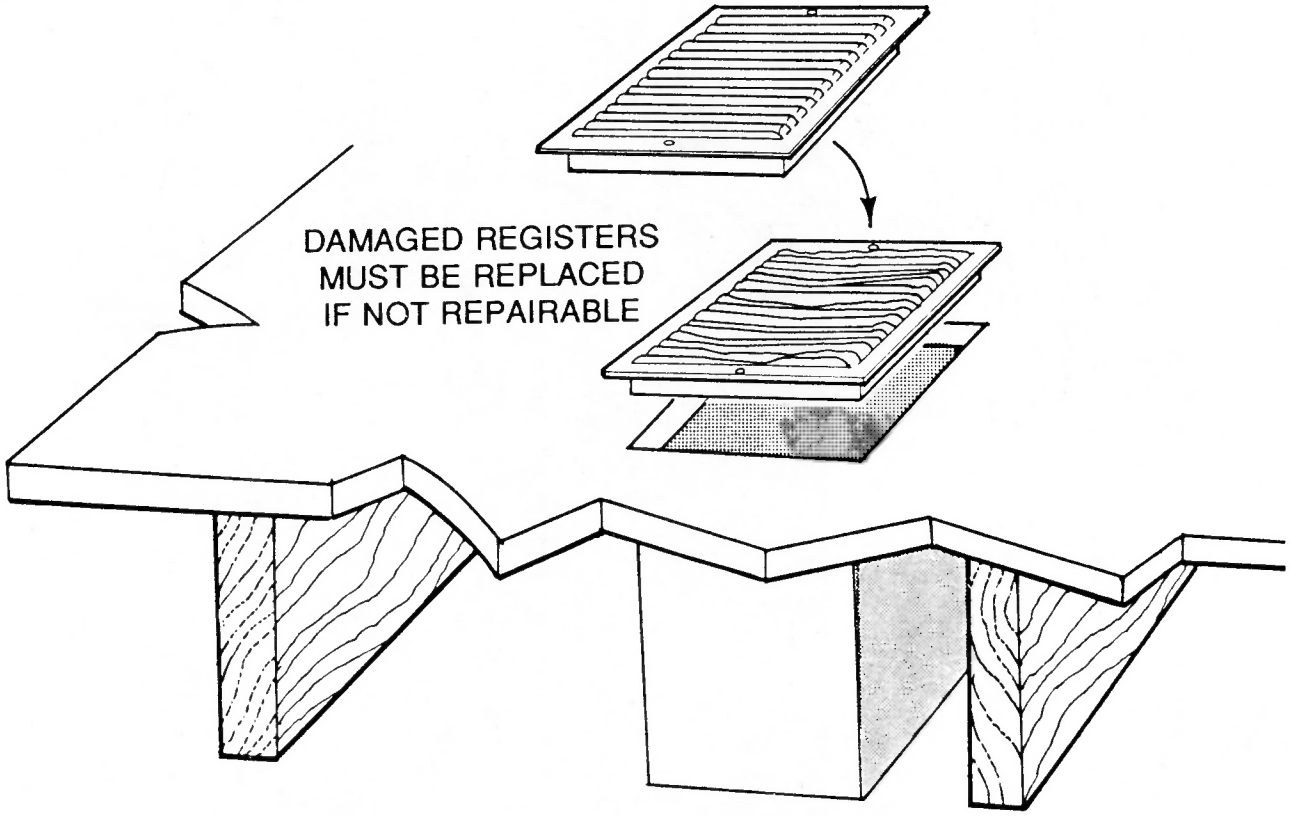

11. BELLYBOARD REPAIR

- All Mobile Homes
  - All holes in the bellyboard (rodent barrier) created to access ducts from under the mobile home shall be repaired.
  - Repairs shall be made as prescribed in Section 13, Item 12.

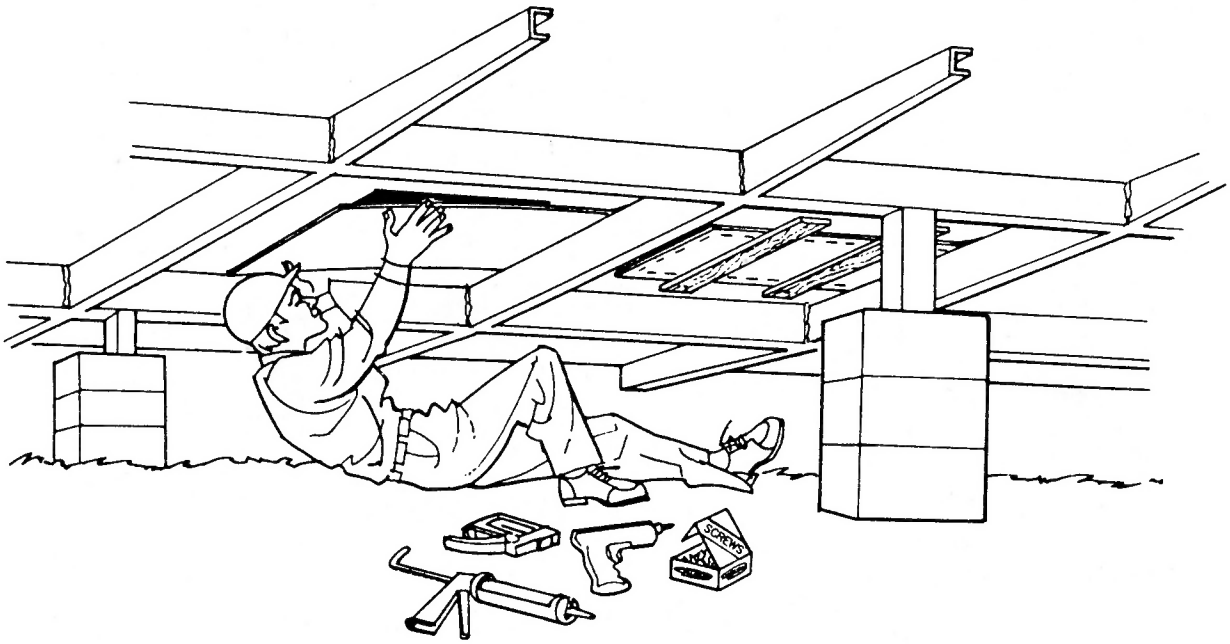

NONFEASIBILITY CRITERIA FOR DUCT REPAIR

1. Blower door analysis shows duct leakage to be at or below target.

2. System has been abandoned.

NONFEASIBILITY CRITERIA FOR REPAIR OF DUCTS REQUIRING CRAWL SPACE ACCESS

1. Less than 18" crawl space clearance.

2. Hazardous insect infestation.

3. Excessive ground moisture (standing water or mud).

4. Sewage waste on ground or other unsanitary conditions posing health and safety hazards.

SECTION 4

CAULKING

PREFACE

Most caulks are marketed (and hence evaluated) simply on the basis of their "lifetime" or how long they will remain pliable. However, there are many criteria one should consider when choosing a caulk. Some of those are listed below:

- Elasticity
- Adhesion
- Cohesion
- Compatibility
- Mildew/Mold Resistance
- Shrinkage
- Expansion
- Paintability
- Shelf Life
- Pot Life
- Curing Time and Temperature
- Application Temperature
- Application Moisture Limits
- Curing Moisture Requirements
- Surface Preparation/Substrate Priming
- UV Resistance
- Thermal Stress Resistance
- Clean Up Requirements (Solvents)
- Outgassing: Toxicity to Installers and Clients
- Packaging: Cartridge Size, Bulk, Aerosol
- Application Techniques
- Cost and Availability

Regardless of the sealant chosen, the need for surface preparation cannot be overemphasized. Surface preparation may be modest or extensive depending on the requirement of the particular product, but at the very least, surfaces must be cleaned prior to application of any caulk or sealant or the joint is likely to fail.

There are sealants appropriate for the stresses and conditions encountered in exterior applications and others that are used only in interior situations. With the redirection of sealing efforts to the inside of the envelope, a wide range of acrylic products are being used successfully. For exterior work, or places where rough and/or different substrates are joined, a higher performance polyurethane or specialty formulation is typically used. Many of the high performance caulks were designed to be used in commercial/industrial applications and carry safety/hazard warnings. When such products are used, the manufacturer's and distributor's Product Safety Data Sheets should be obtained and provided to all crew members.

All caulking materials should be installed in accordance with the manufacturer's guidelines regarding temperature and ventilation of the workspace. It is also important to inform the client that there may be associated odors, and to determine if they have any particular allergies or sensitivities that might further dictate choice of materials.

Practices for the use of Solvent Release Type Sealants can be found in ASTM C804-83 (Vol. 4.07 page 52).

A guide for the use of Elastomeric Joint Sealants can be found in ASTM C962-81 (Vol. 4.07 page 181).

SECTION 4

CAULKING STANDARDS

1. **RECOMMENDED MATERIALS**
   - **Oil and Resin Base**
     - **<u>Not</u> acceptable.**
   - **Acrylic Sealants**
     - **Conformance to F.S. TT-S-00230C (ASTM 834).**
   - **Latex Sealing Compounds**
     - **Conformance to ASTM C834-76 (1986).**
   - **Butyl Rubber**
     - **Conformance to F.S. TT-S-001657.**
   - **Chlorosulfonated Polyethylene**
     - **Conformance to F.S. TT-S-00230C.**
   - **Polyurethane or Polysulfide**
     - **Conformance to F.S. TT-S-227E.**
   - **Elastomeric Joint Sealants (including polysulfide, polyurethane, and silicone)**
     - **Conformance to ASTM C920-87.**
   - **Foam Sealant**
     - **Polyurethane non-expanding foam.**
   - **All Materials**
     - **Shall meet 15 year warranty minimum.**

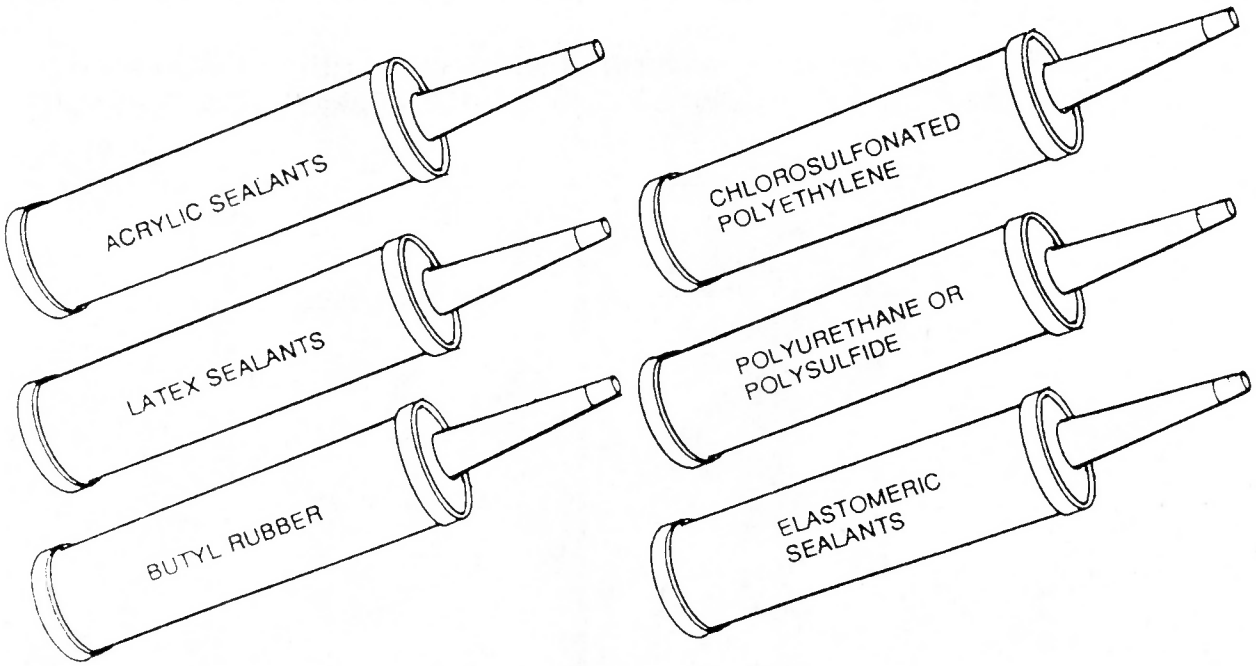

2. MATERIALS FOR EXTERIORS
   - All Metal Joints or Two Different Materials
     - Caulking shall have an elongation rating of at least 200%.
     - Elastomeric types recommended.
   - Wood Joints
     - Acrylic latex, silicone, butyl, or urethane.
   - Masonry
     - Elastomeric (polyurethane) types recommended.

3. MATERIALS FOR INTERIORS
   - All Unpainted Surfaces
     - Caulk shall be nontoxic and clear when dry.
     - Paintable caulk recommended.
   - All Painted Surfaces
     - Caulk shall be nontoxic, clear when dry, or color coordinated with interior surface.
     - Paintable caulk recommended.

4. WHERE TO INSTALL
   - All Mobile Homes
     - Caulk shall be installed in:
       - Interior and exterior cracks and gaps where blower door identifies a significant leak.
       - Exterior locations, where needed, to prevent damaging water penetration.
     - Caulking shall <u>not</u> be performed which will tighten the shell to less than the Minimum Allowable CFM_{50} Shell Leakage (per Appendix B).

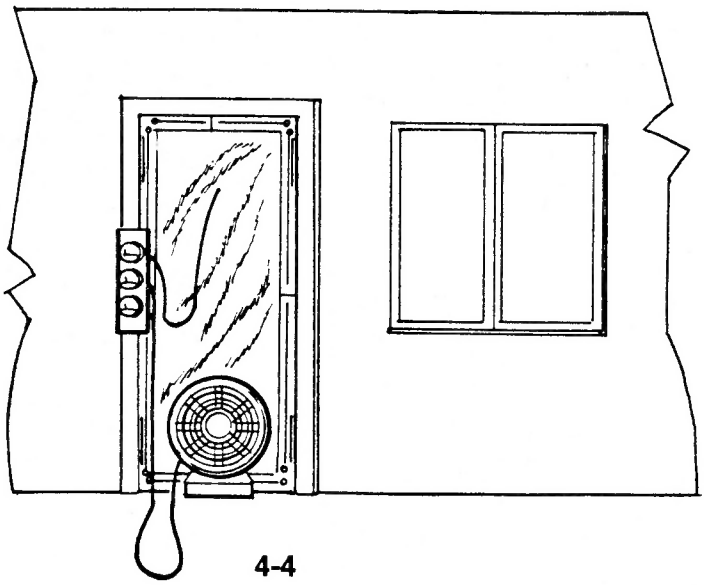

4. WHERE TO INSTALL (continued)
   - Determination of Priority
     - Repair priority shall be determined by feasibility, based primarily upon the size and location of the leak and the cost effectiveness of repair.
     - Largest leaks shall be sealed first, with primary focus on envelope penetrations.
     - All caulking is governed by the Economic Stop Policy (Section 2, Item 7).
   - Interior/Exterior Caulking Priority
     - Interior caulking shall be the first priority for infiltration reduction.
     - Exterior caulking shall be geared primarily toward prevention of water penetration.
       - Exterior door and window frames, light fixtures, and holes in siding may be caulked.
       - Top and bottom bypasses on ventilated metal walls shall <u>not</u> be sealed.

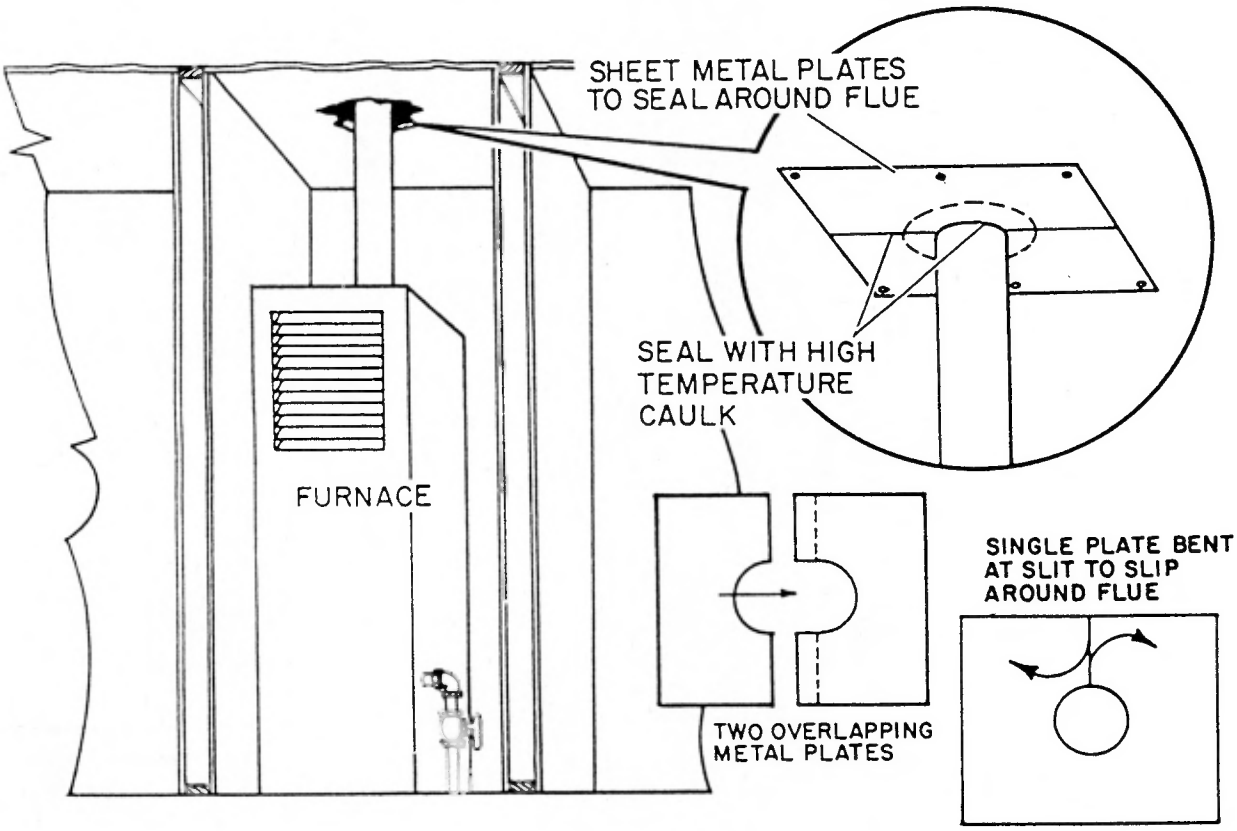

4. WHERE TO INSTALL (continued)
   - Interior Caulking Locations
     - Only leaks determined to be significant by blower door analysis shall be sealed, such as:
       - Plumbing, venting, and electrical penetrations, including electrical service panel, washer and dryer hookups, and exhaust fan vents.
       - Furnace and water heater closet leaks.
       - Cracks around bathtub and shower, around loose wall and ceiling paneling, around light fixtures, etc.
       - Hidden leaks under sinks, in cabinets and closets, especially in kitchens and bathrooms.
       - Cracks, gaps, and holes in floors, walls, and ceilings, especially joints between the mobile home and add-ons, and between halves of a double-wide.
       - Cracks around window and door trim and leaks around window-mount appliances.

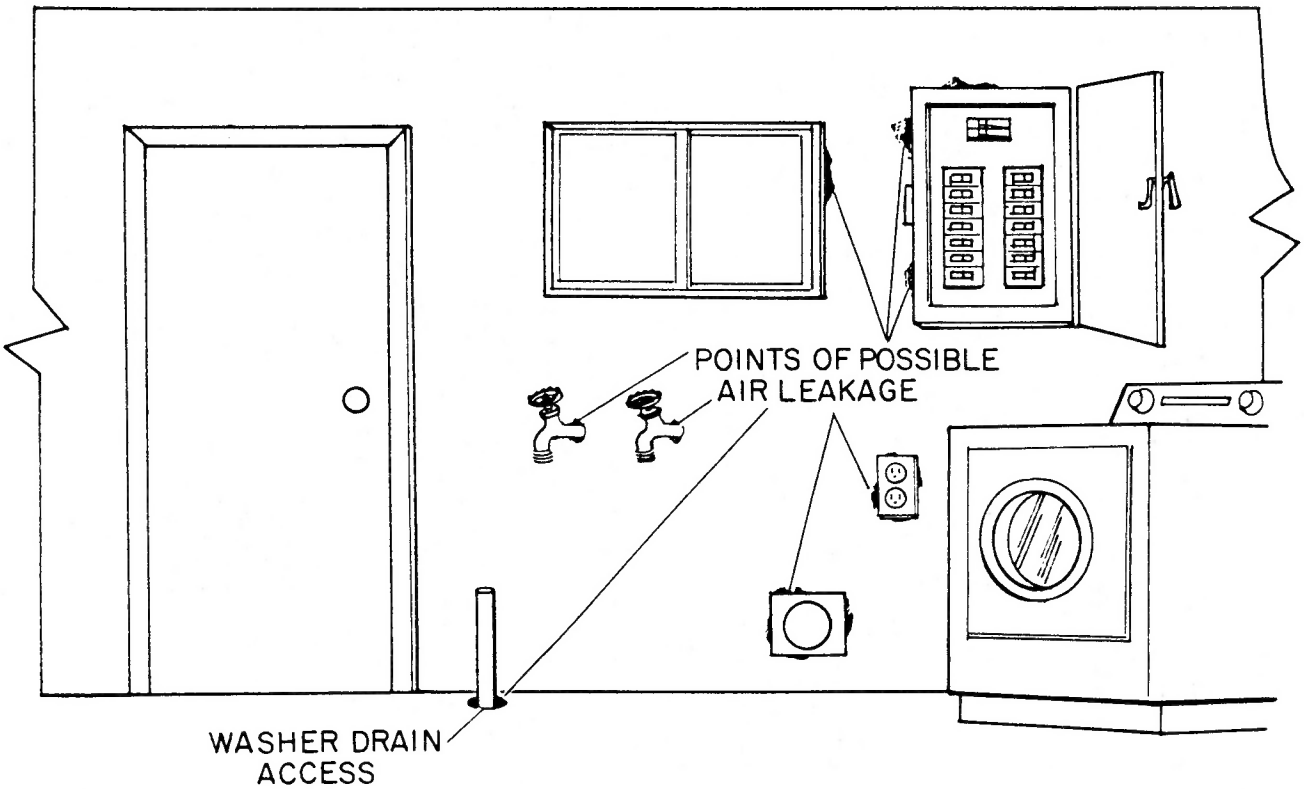

5. INSTALLATION REQUIREMENTS
   - All Types Caulk
     - Manufacturer's instructions shall be followed in all cases, with careful attention to:
       - Application temperature limits.
       - Primer requirements.
     - Cracks 1/16" to 3/8" may be caulked with any approved material.
     - Cracks 7/16" to 7/8" shall be caulked with silicone, polyurethane, or acrylic latex caulking only.

6. SURFACE PREPARATION REQUIREMENTS
   - All Types Caulk
     - Surface shall be free of loose or cracked caulking, dirt, and debris.
     - Surface shall be free of moisture unless allowed by manufacturer's specifications.
     - Manufacturer's instructions shall be followed.

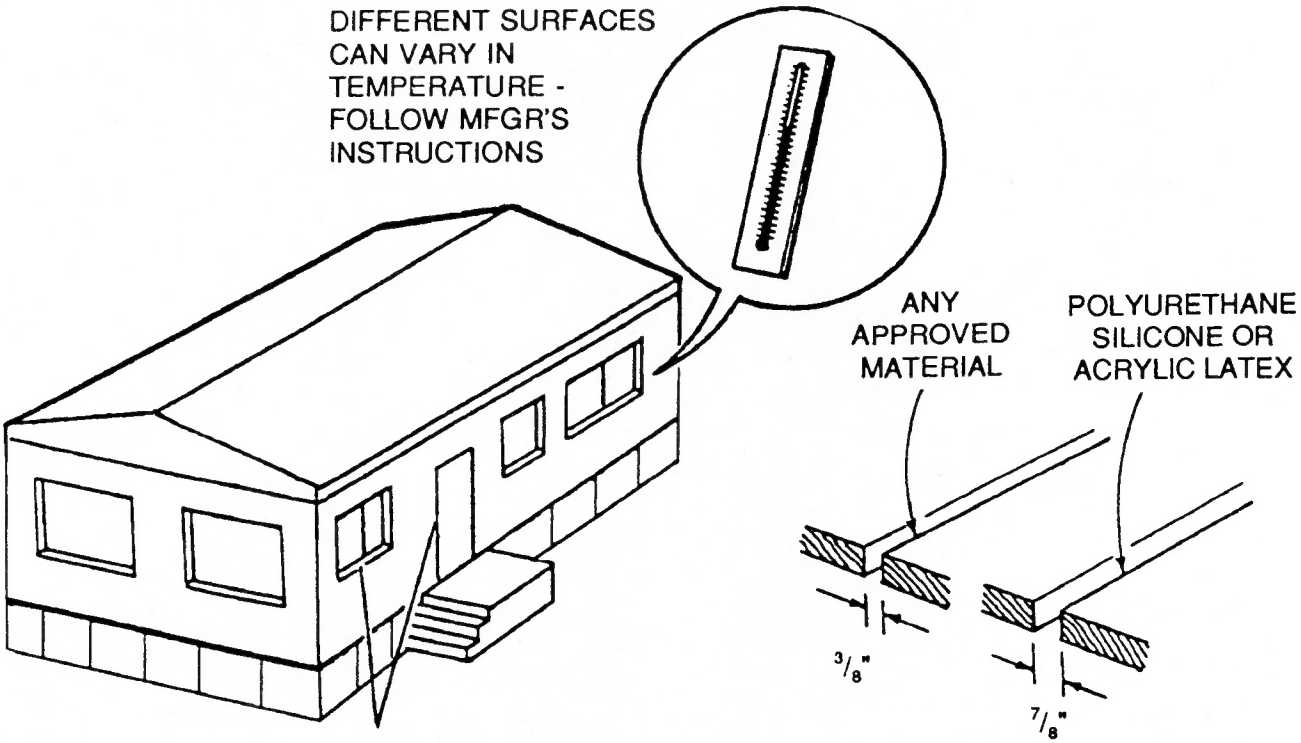

CAULK WATER LEAKS AROUND WINDOWS, DOORS AND LIGHT FIXTURES

7. FINISHED BEAD
   - All Types Caulk
     - Bead shall be continuous and free of voids.
     - All excess caulk shall be removed.
     - Cracks shall be sealed completely.
   - Foam
     - Shall be trimmed flush with the surface where visually objectionable.

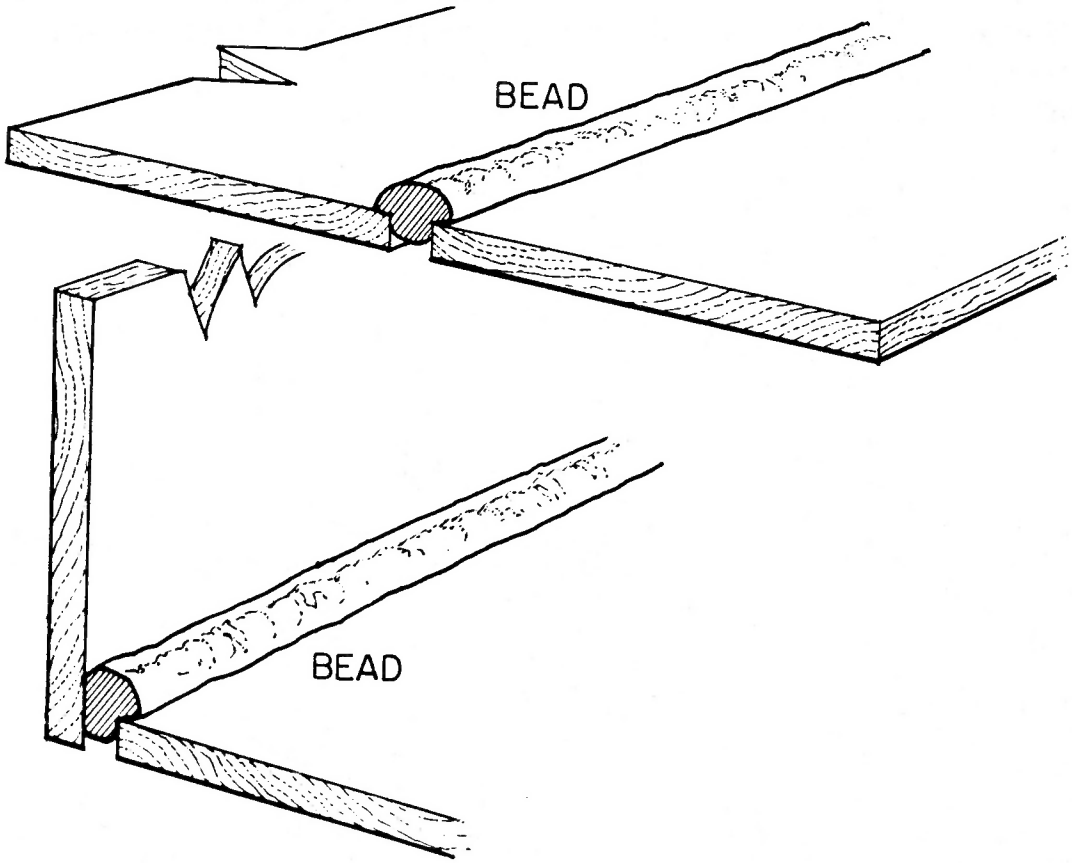

8. SIZE OF CRACKS
   - All Types Caulk
     - All cracks 3/8" to 7/8" wide shall be filled to within 1/2" of the surface before caulking.
     - Cracks wider than 7/8" shall <u>not</u> be caulked; repair.
   - Foam Sealant
     - Shall be used only in cracks 1/4" or larger.

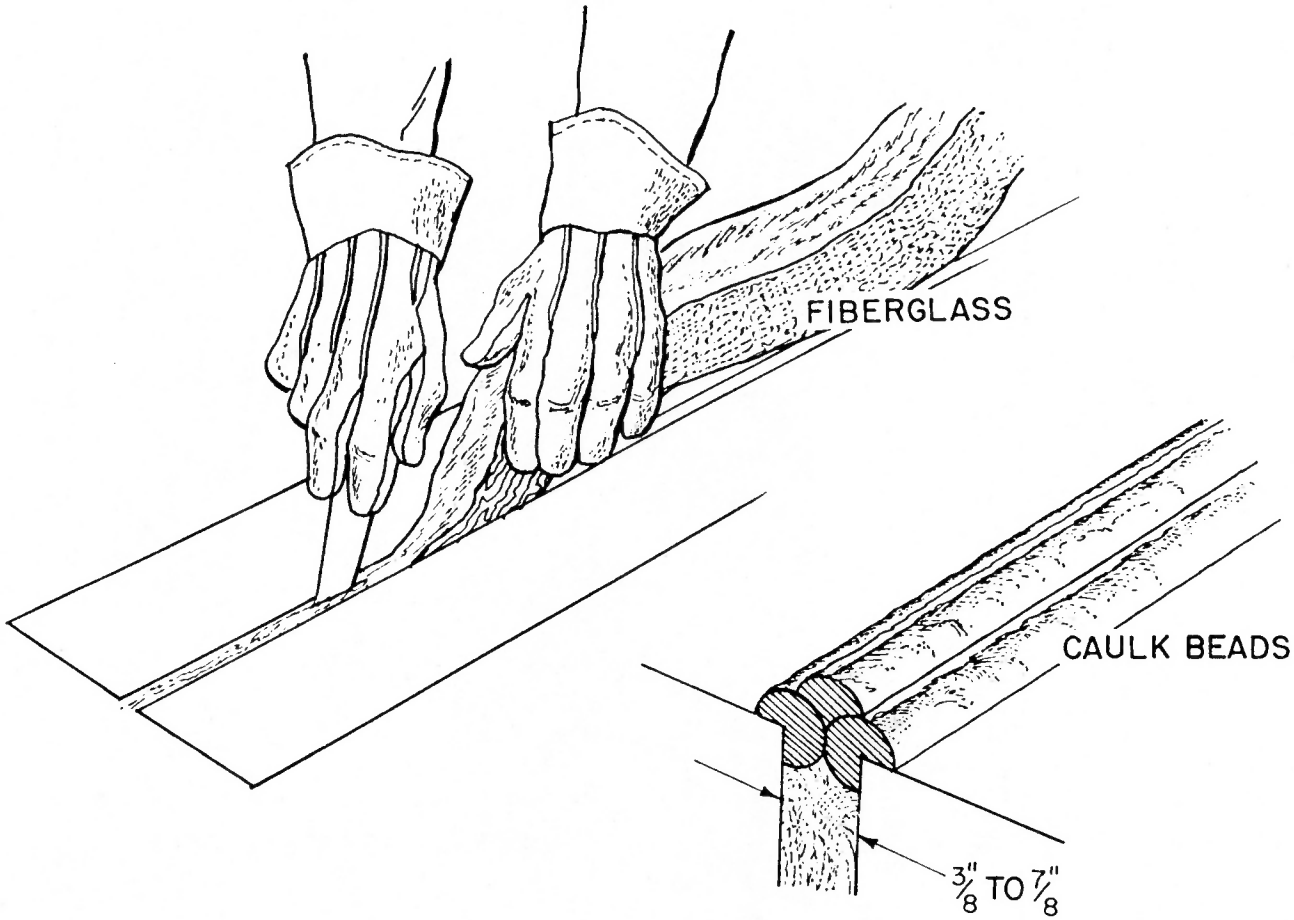

9. FILLER MATERIAL TYPES

- **Spaces from 3/8" to 7/8" shall be filled to within 1/2" of the surface with suitable filler material, such as:**
  - **Closed cell polyethylene rod or equivalent.**
  - **Flexible fiberglass.**
- **Filler material shall be covered with caulk.**

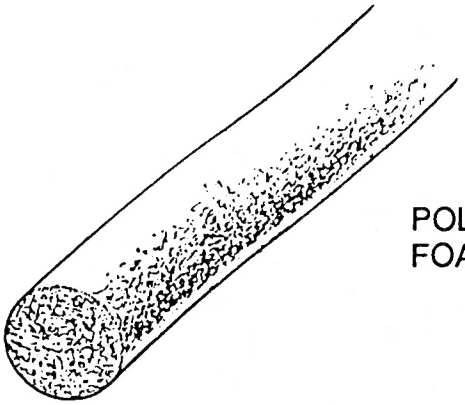

POLYETHYLENE FOAM

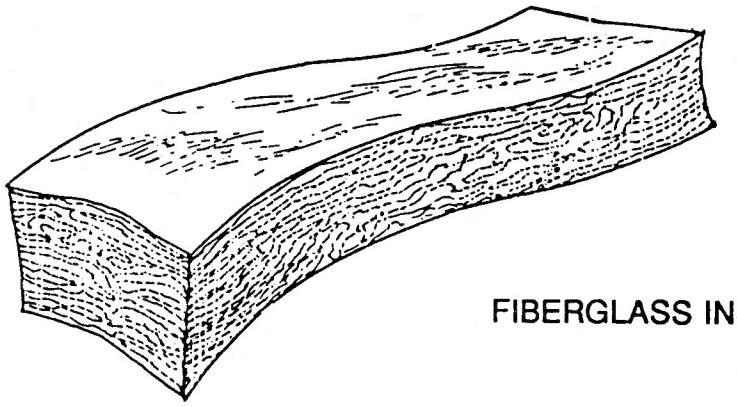

FIBERGLASS INSULATION

NONFEASIBILITY CRITERIA FOR CAULKING

1. Already properly installed.
2. Deemed <u>not</u> needed by audit or blower door test.
3. Minimum ventilation requirement has been reached.
4. Economic stop goal has been met.

SECTION 5

WEATHERSTRIPPING

PREFACE

Although weatherstripping was once considered one of the most effective weatherization measures, recent understanding indicates that cracks around doors and windows are usually only a minor source of infiltration compared to more serious bypasses through floors, walls, and ceilings. In fact, blower door tests often show that windows and doors with no weatherstripping fit and operate properly with little or no infiltration.

It is very important to install weatherstripping properly. In many cases, it has been found that weatherstripping applied to both doors and windows has actually prevented them from closing properly and air leakage has actually increased.

Weatherstripping is used primarily on windows and doors; however, evaporative cooler, air conditioner, and exhaust vent covers, etc. can benefit as well. There are numerous types of products available that may be appropriate for a particular use, and there are new products and improvements on older products coming to the market regularly. High quality compression gaskets are made of silicone, neoprene, reinforced rubber, closed cell foam, and specially formulated vinyl or PVC plastics. Spring and cushion or slipjoint material may be made of spring metal, "v" bronze or extruded plastic. Brush, or pile, weatherstripping usually has a thin plastic "fin seal" lodged in the bristles to further limit air movement. Magnetic strips in a flexible PVC gasket are used extensively on steel doors.

The choice of weatherstripping type should reflect the circumstances of the unit to be weatherstripped. Matching the material to the type of closure is essential to get a tight seal. For example, a foam gasket will only perform well under compression. When used on the sides of a sliding double hung window, for instance, the abrasion would quickly cause the adhesive to fail and the foam to wear away. Hence, one of the few good applications for such products would be an attic access hatch that is used very rarely.

Surface preparation is the key to the success of all air sealing efforts. A dirty, lumpy, or deteriorated surface should be cleaned and smoothed to promote adhesion, and prevent air from leaking between surface irregularities.

Self-adhesive products sooner or later fail by becoming detached from the base surface, but they can be effectively improved if they are attached with supplemental contact adhesive and/or mechanical fasteners.

Above all, doors and windows must function smoothly and easily after weatherstripping and the material must be installed in such a manner as to be durable and effective.

Actual selection of the material which is to be used for application depends on the nature of operation of the unit and the materials from which it is made. For instance, a veneer exterior door has good stability in its width and height, but may warp under some conditions. If there is a fairly even 1/8" to 1/4" gap around all sides, this may be candidate for spring and cushion metal weatherstripping applied to the sides of the door jamb. A solid wood frame-and-panel door, however, is less likely to warp, and more likely to expand and contract with the seasons. In this case, the side gaps will vary greatly, so a rigid gasket door stop may be more appropriate. Other considerations are as follows:

Selection Issues

- Nature of closure (sliding or opposing)
- Condition of meeting surfaces
- Existing tolerances
- Nature of window or door components
- Impact on component operability

Durability and Exposure

- Temperature extremes
- UV radiation
- Precipitation
- Abrasion
- Maintenance and replacement capability

Properties and Characteristics

- Attachment method
- Sealing to substrate
- Thermal conductance
- Moisture permeability
- Preservative requirements
- Painting and coverage restrictions
- Appearance and aesthetics

SECTION 5

WEATHERSTRIPPING STANDARDS

1. **RECOMMENDED MATERIALS**
   - **Foam Tape**
     - **Shall be closed cell and UV resistant.**
     - **Shall have adhesive backing.**
   - **Vinyl V-strip**
     - **Shall have adhesive backing.**
   - **Silicone Compression Bulb and Tubing**
     - **Stabilizer flange, when present, must have a pressure sensitive adhesive backing.**
   - **Spring and Cushion on Metal**
     - **Brass, bronze or stainless steel only.**
     - **Aluminum <u>not</u> allowed.**
   - **Pile**
     - **For replacement only.**
   - **Rigid Gasket (Aluminum Carrier)**
     - **Shall be adjustable and attached with screws.**
     - **Pliable gasket attached to an extruded aluminum carrier.**
     - **Carrier .05" thick, minimum.**
     - **Shall have elongated mounting holes 9" on center maximum.**
     - **Secondary seal between carrier and mounting surface shall be a minimum of 1/8" wide and extend the full length of the carrier.**
     - **Minimum elongation of 300%.**
   - **Adhesive**
     - **Automotive weatherstripping adhesive or equivalent recommended for additional adhesion for products with adhesive backing.**
     - **Silicone caulk may be used to adhere round silicone tubing.**

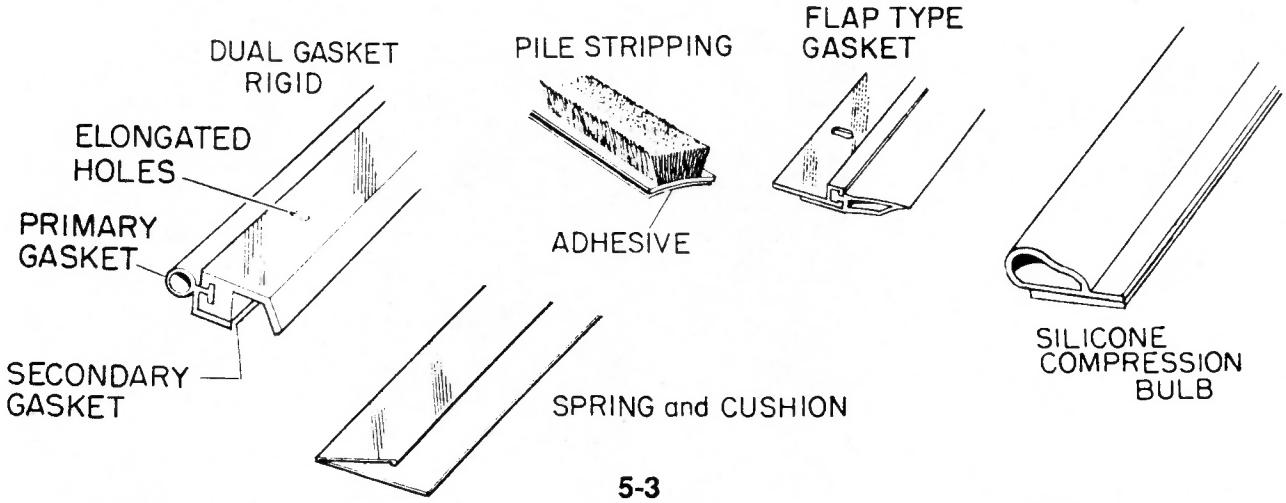

2. WARRANTY
   - All Types
     - Minimum 3 year warranty required.

3. SIZING AND PLACEMENT
   - All Types
     - Doors and windows shall function easily and close without unusual force after weatherstripping is installed.

4. VERTICAL SLIDING WINDOWS
   - Materials Allowed
     - Closed cell foam in compression only (top and bottom).
     - Vinyl V-strip.
     - Silicone bulb.

5. HORIZONTAL ALUMINUM SLIDING WINDOWS AND DOORS
   - Materials Allowed
     - Replacement pile.
     - Closed cell foam in compression only.
     - Vinyl V-strip.

6. AWNING AND JALOUSIE
   - Materials Allowed
     - Commercially available specialty materials may be installed.
       - Operating mechanism shall function properly.
       - Weatherstripping shall effectively reduce air leakage without hampering window operation.

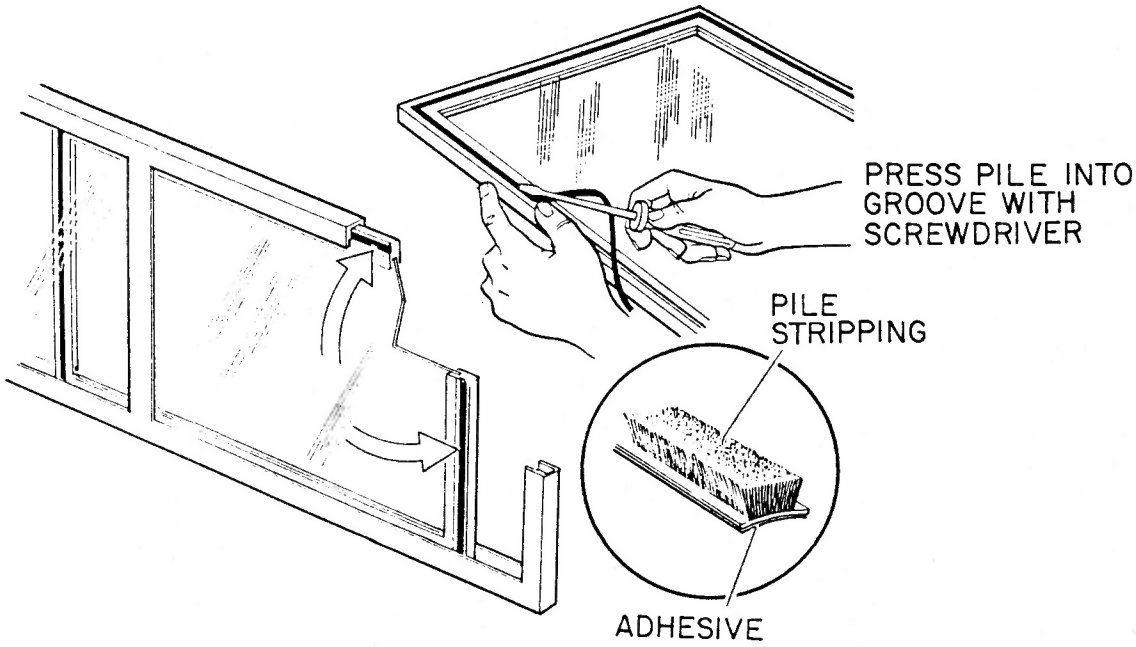

7. ENTRANCE DOOR JAMBS

- **Wood Jambs**
  - **Weatherstrip with:**
    - **Rigid gasket.**
    - **Spring metal.**
    - **Cushion metal.**
- **Metal Jambs**
  - **Weatherstrip with:**
    - **Vinyl V-strip.**
    - **Silicone tubing or bulb in compression only.**
    - **Closed cell foam in compression only.**
- **All Jambs**
  - **Weatherstripping shall be installed as prescribed in Item 8.**

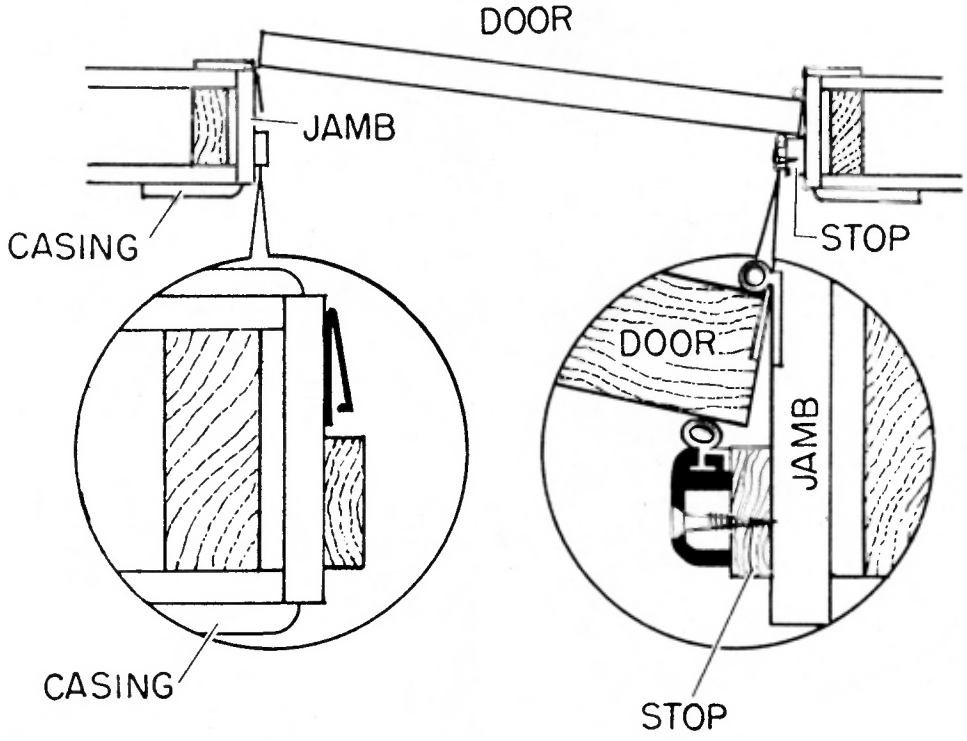

8. **ATTACHMENT SYSTEM**
   - **Rigid Gasket**
     - **Shall be adjustable and attached with screws.**
     - **Maximum 9" between screws.**
     - **A screw shall be placed within 3" of each end.**
   - **Spring and Cushion Metal**
     - **Shall be mechanically attached per manufacturer's instructions.**
     - **Maximum 4" between attachments.**
     - **Attachment shall be placed within 1" of each end.**

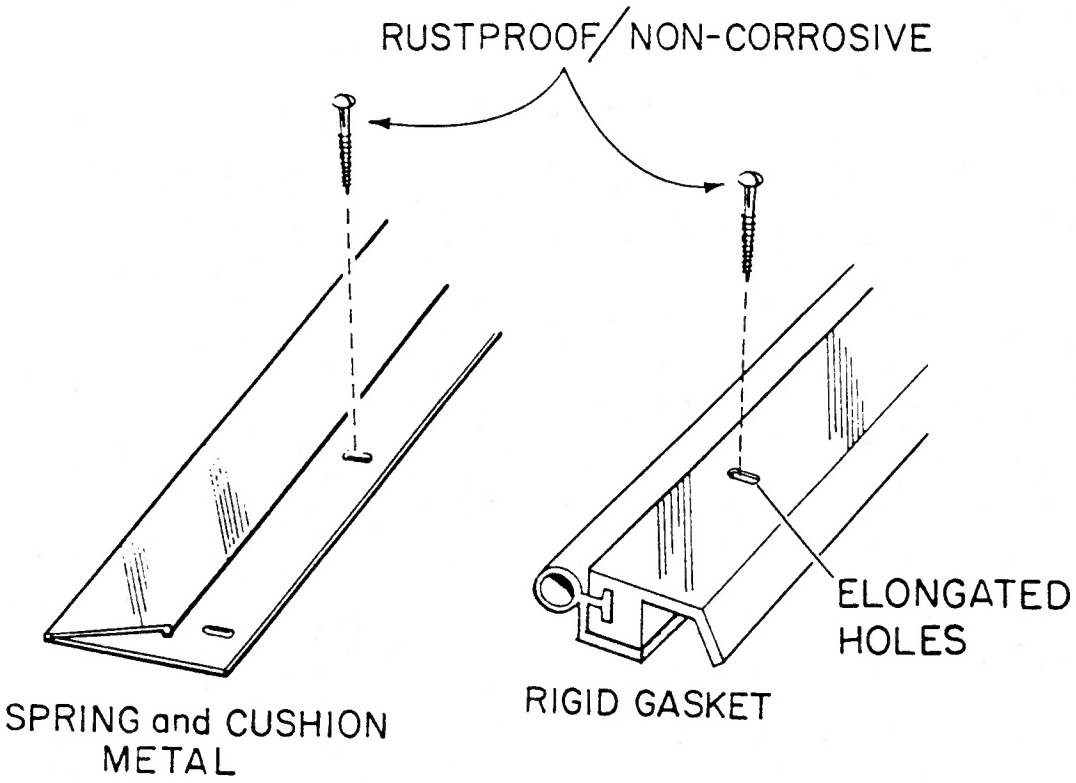

8. **ATTACHMENT SYSTEM (continued)**
   - **Replacement Pile**
     - **Shall fit snugly into retaining channel.**
   - **All Vinyl, Silicone, and Foam Materials**
     - **Mounting surface shall be thoroughly cleaned with solvent.**
     - **Manufacturer's application instructions shall be followed.**
   - **Vinyl V-Strip and Foam Tape**
     - **Shall be attached with adhesive backing.**
     - **Supplementary adhesive recommended.**

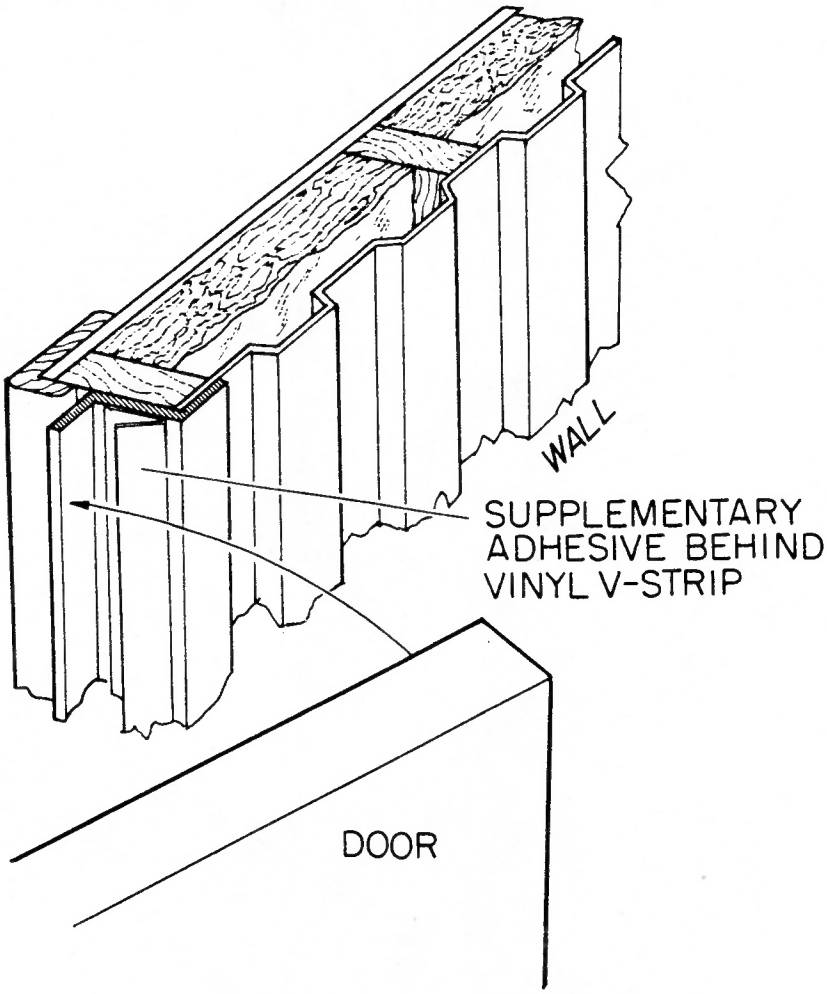

8. ATTACHMENT SYSTEM (continued)
   - Silicone Bulb with Stabilizer Flange
     - Shall be installed in a compression application only.
     - When mounting over wood surface, shall be additionally secured with nails or staples through the stabilizer flange.
       - Maximum 4" between attachments.
       - An attachment shall be placed within 1" of each end.
     - Supplementary adhesive recommended when mounting on metal surface.
   - Round Silicone Tube Without Flange
     - Shall be installed in door jamb in a compression application only.
     - Shall be attached with silicone caulk or other method specified by manufacturer.
     - Shall be placed in the corner formed by two perpendicular surfaces.

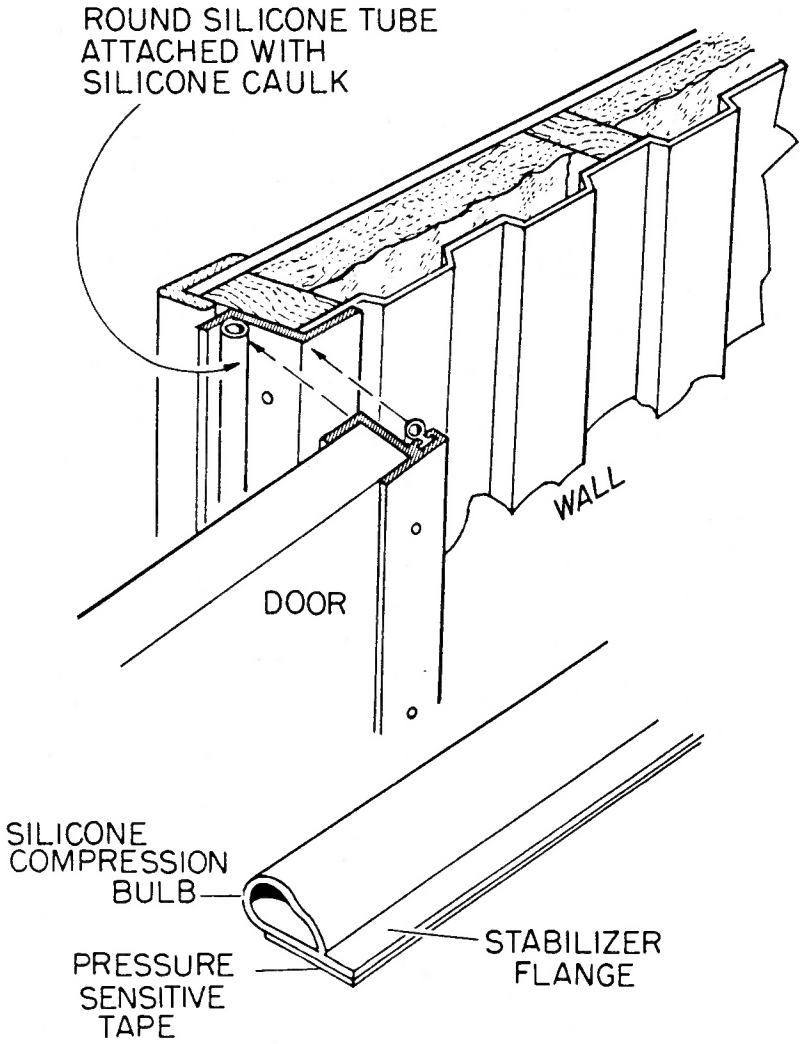

9. LOCATION
- All Types
  - Weatherstripping shall be applied only where deemed cost effective by blower door analysis.
  - Weatherstripping shall be placed on windows and doors between conditioned and unconditioned space only.

10. GASKET-TO-GASKET CONTACT
- All Types
  - Gasket-to-gasket contact is required at corners.
  - Each strip to be one continuous piece, if possible.
  - Corner "V" notching of rigid gasket materials is acceptable.

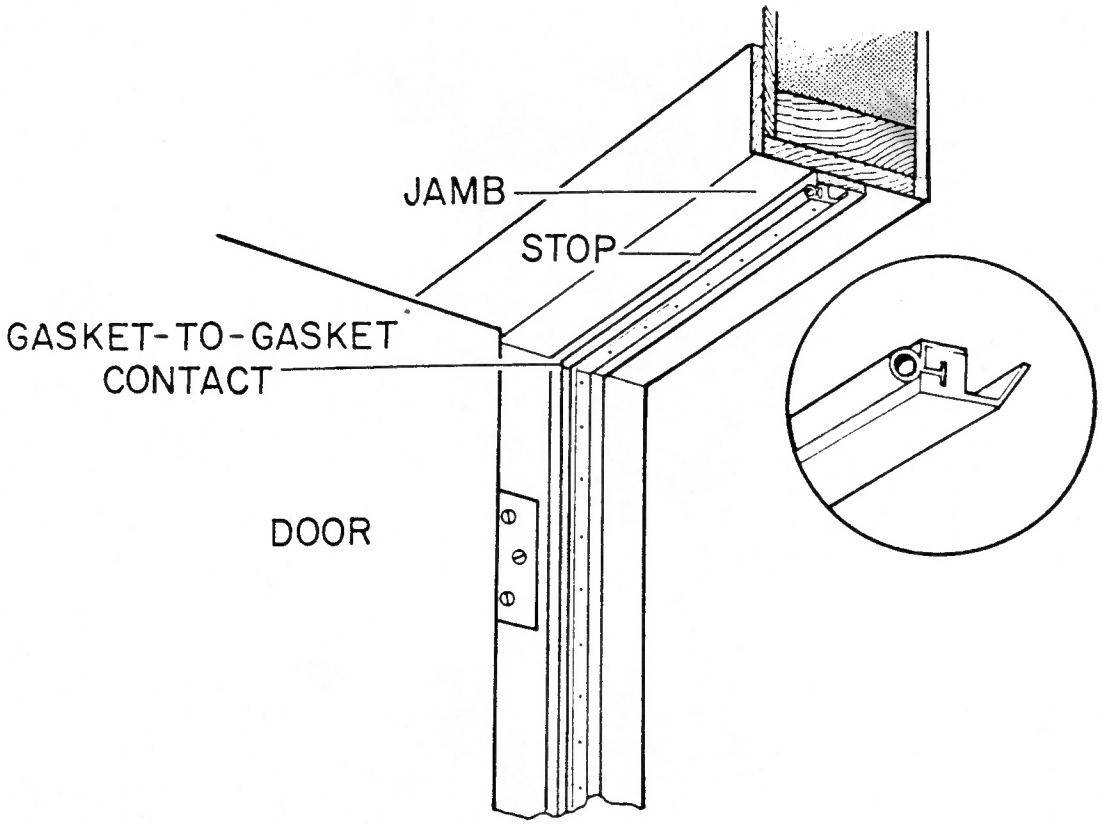

11. THRESHOLDS

- Wood and Metal
  - Only hardwood and metal shall be used.
  - Gasket saddles <u>not</u> allowed.
  - Metal shall be permanently screwed in place.
  - Wood may be glued, nailed, or screwed in place.
  - Metal threshold shall have floor sealer gasket.
  - Wood threshold shall have floor sealer gasket or bead of silicone caulk between floor and threshold.
  - Bump-up threshold may be used on outswinging doors for which a threshold and shoe combination cannot be feasibly installed.
  - Threshold may extend above the finish floor a maximum of:
    - 31/32" if no occupant is handicapped.
    - 3/8" if any occupant is physically handicapped.

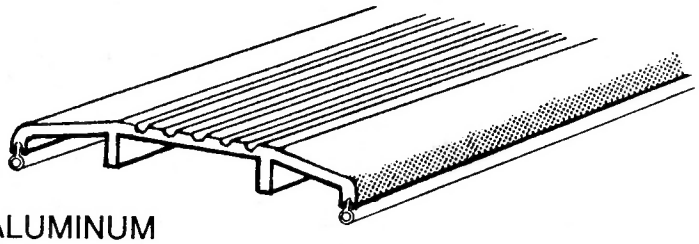

ALUMINUM

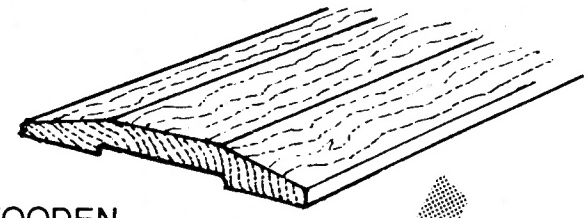

WOODEN

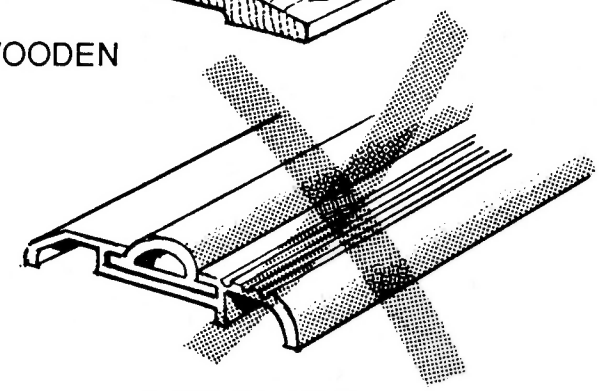

GASKET SADDLE THRESHOLD

12. DOOR BOTTOM MATERIAL

- Shoe and Saddle
  - Shoe and saddle combination shall be used when feasible.
  - Shoe shall have:
    - Vinyl or silicone gasket.
    - Elongated mounting holes to allow for adjustment.
    - Rain drip in exterior applications.
  - U-shaped shoe shall be installed where feasible.
  - L-shaped shoe allowed only when U-shoe is <u>not</u> feasible.
- Retractable Sweeps
  - Flip sweep or automatic door bottom shall be installed only when:
    - There is no threshold over the finished floor.
    - A shoe and saddle combination is <u>not</u> feasible.
- Stationary Sweeps
  - A stationary sweep shall be installed only:
    - In conjunction with a saddle threshold.
    - On the interior side of the door.
    - When no other door bottom treatment is feasible.
  - Stationary sweeps shall <u>not</u> drag on the floor covering (wood, tile, carpet, etc.).

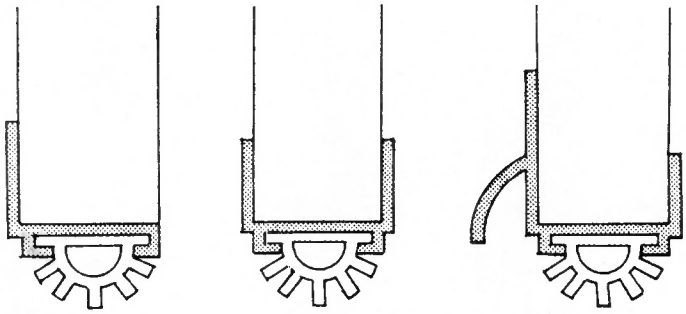

L-SHAPED U-SHAPED U-SHAPED WITH RAIN DRIP

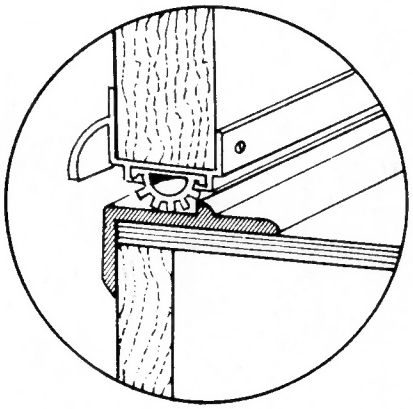

U-TYPE SHOE WITH RAIN DRIP

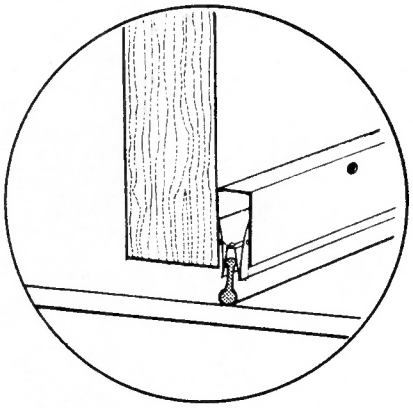

AUTOMATIC DOOR BOTTOM ON FLAT FLOOR

13. FLUSH-MOUNT DOORS
   - All Mobile Homes
     - Silicone bulb or tube, closed cell compressible foam tape, and vinyl v-strip may be used where feasible.
     - When other door bottom applications are <u>not</u> feasible, v-strip may be installed on the under side of the door for added bottom seal.

14. WINDOWS IN EXTERIOR DOORS
   - All Mobile Homes
     - Windows shall be weatherstripped in conformance with this section.

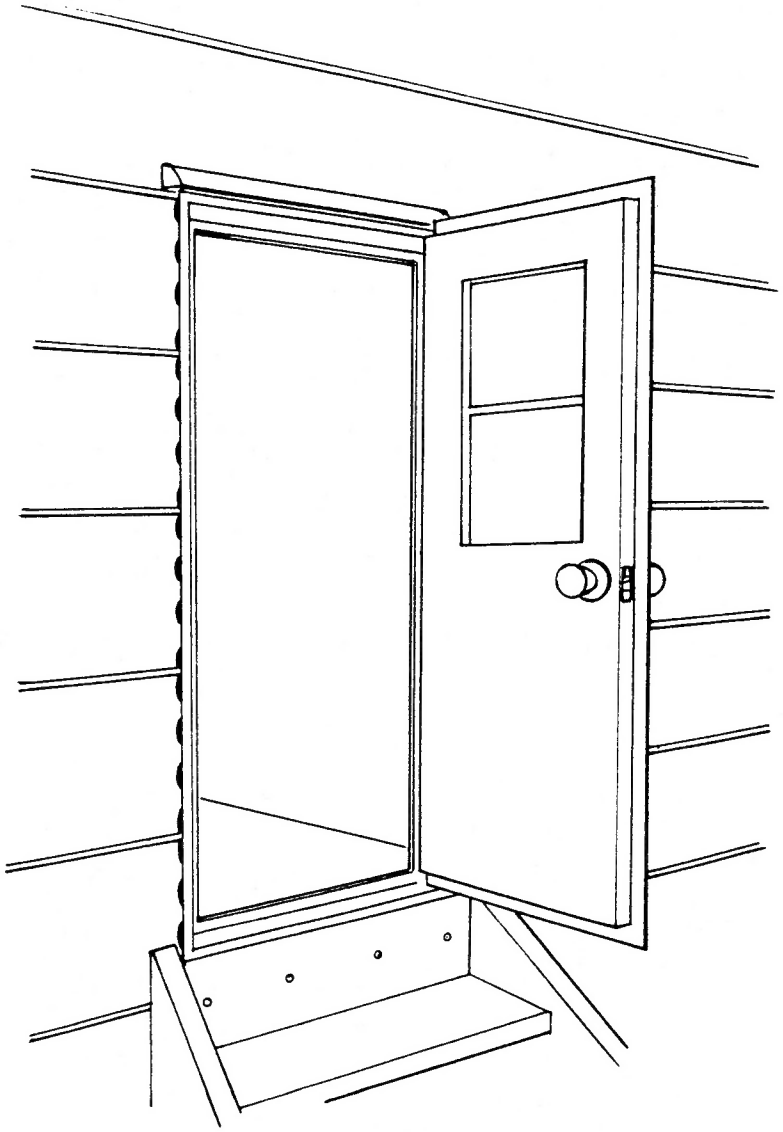

NONFEASIBILITY CRITERIA FOR WEATHERSTRIPPING WINDOWS

1. Already properly installed.
2. Deemed <u>not</u> cost effective by audit or blower door analysis.
3. Minimum ventilation requirement has been reached.
4. Economic stop goal has been met.
5. Window located between two conditioned or two unconditioned areas.
6. Airtight storm window present.
7. Jalousie or awning window present which cannot be effectively treated.

NONFEASIBILITY CRITERIA FOR WEATHERSTRIPPING DOORS

1. Already properly installed.
2. Deemed <u>not</u> cost effective by audit or blower door analysis.
3. Minimum ventilation requirement has been reached.
4. Economic stop goal has been met.
5. Door located between two conditioned or two unconditioned areas.
6. Airtight storm door present.

SECTION 6

GLASS REPLACEMENT

PREFACE

One can easily become confused about glazing requirements since there are several construction codes in the U.S. with differing standards. Site-built homes, for example, are governed by several model codes, including BOCA in the Northeast and Mid-Atlantic, SBCCI in the Southeast, ICBO in the West and CABO in other areas, plus supplemental codes such as the NEC. Mobile homes, on the other hand, are constructed in conformance with the HUD code. Glazing standards are different for mobile homes, and recent changes in those standards have added to the confusion.

The maximum allowable size for each thickness and type of glass has changed to more stringent standards. Formerly two tables were used which differentiated between regions with differing average wind speeds. Now a single standard is used as spelled out in AAMA 1701.2-85.

The pane size limitations specified in this section conform to the current HUD standards which are different from those contained in the previous draft of this mobile home weatherization standards document. Should glass sizes be encountered in older mobile homes which do not conform to the current standard, replacement glass should be selected to match the original. Any special problems will be dealt with on a case-by-case basis.

SECTION 6

GLASS REPLACEMENT STANDARDS

1. RECOMMENDED MATERIALS
   - Single Strength (SS)
     - Allowed when DS is too thick for the frame.
     - Maximum pane size: 11 sq. ft.
   - Double Strength (DS)
     - Recommended to replace SS when frame thickness is adequate.
     - Maximum pane size: 15 sq. ft.
   - 3/16" Plate Glass
     - Maximum pane size: 30 sq. ft.
   - 1/4" Plate Glass
     - Maximum pane size: 43 sq. ft.
   - Fully Tempered Glass
     - Multiply the above listed sizes by 4.
   - Heat Strengthened Glass
     - Multiply the above listed sizes by 2.
   - Safety Glass
     - Shall meet the specifications of ANSI Z97.1-1984.
     - Shall be permanently labeled.
   - Plastic Materials
     - Plastic sheets shall be a minimum of 1/8" thick and UV treated (polycarbonate recommended).
     - All sheeting shall have sufficient rigidity to prevent bowing after installation.
     - Acrylic sheets and plastic film are <u>not</u> allowed.

SINGLE STRENGTH MAXIMUM 11 SQ. FT.	DOUBLE STRENGTH MAXIMUM 15 SQ. FT.	3/16" PLATE MAXIMUM 30 SQ. FT.	1/4" PLATE MAXIMUM 43 SQ. FT.

1. **RECOMMENDED MATERIALS (continued)**
   - **Jalousie Windows**
     - **Minimum 3/16" plate glass shall be installed.**
     - **Maximum pane length shall be 48".**
     - **Regular, float, patterned, frosted, tempered, and heat strengthened glass allowed.**
     - **Wired, laminated, and sand blasted glass <u>not</u> allowed.**

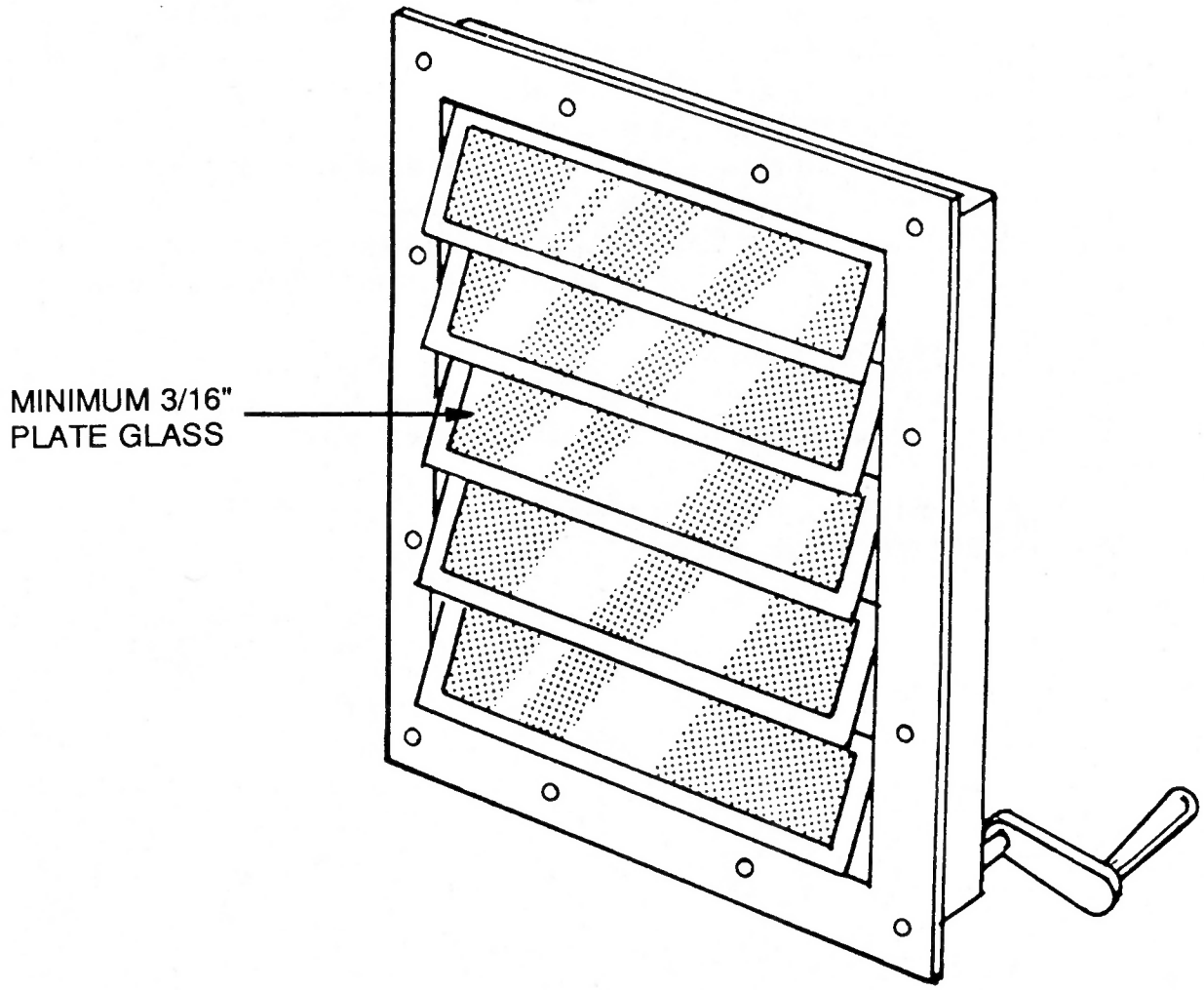

2. SAFETY GLASS
   - Windows
     - Required in any window adjacent to a door where:
       - The nearest vertical edge of the window is within a 24" arc of either vertical edge of the closed door, and
       - The bottom edge is less than 60" above the walking surface,
       - Unless there is an intervening wall or other permanent barrier between the door and the glazing.
     - Required in panes larger than 9 sq. ft. where:
       - The bottom edge is less than 18" above the floor, and
       - The top edge is more than 36" above the floor, and
       - A walking surface is within 36" horizontally of the glass,
       - Unless a protective bar exists which is:
         - Located 34" to 38" above the floor.
         - A minimum of 1 1/2" in height.
         - Capable of withstanding a horizontal load of 50 lbs. per linear foot without contacting the glass.
     - Required in exterior windows located in shower and bathtub enclosures that are less than 6' above the floor of the enclosure.
   - Doors
     - Required in all windows located in entrance doors.
     - Required in fixed and sliding panels of sliding doors and panels in swinging doors other than wardrobe doors.
   - Plastic
     - May be used in lieu of safety glass.
     - Shall be UV treated and at least 1/8" thick.

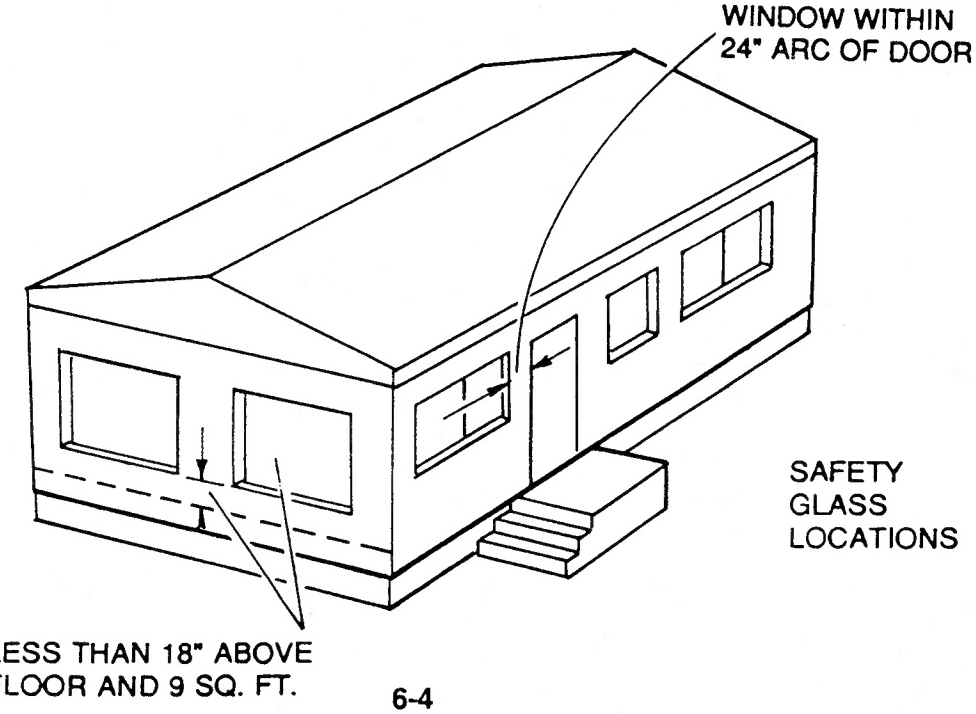

3. SEALANT
- Rubber Gaskets
  - Gasket shall make watertight seal all around the sash.
  - New replacement gasket shall be:
    - Installed when feasible.
    - Proper size to form snug fit in channel.
  - Existing gasket may be reused.
    - Shall be in satisfactory condition to provide a complete seal.
    - Clear silicone caulk or equivalent may be added to fill in the gaps.
  - Where rubber gasket cannot be provided, glass shall be stabilized in clear silicone caulk or equivalent.
- Glazing Compound
  - Required in windows designed to use glazing compound.
  - Caulk <u>not</u> allowed in lieu of glazing compound.
  - Glazing compound shall:
    - Be the type which remains pliable.
    - Conform to FS TT-P-00791B and ASTM C669-75 (1989).

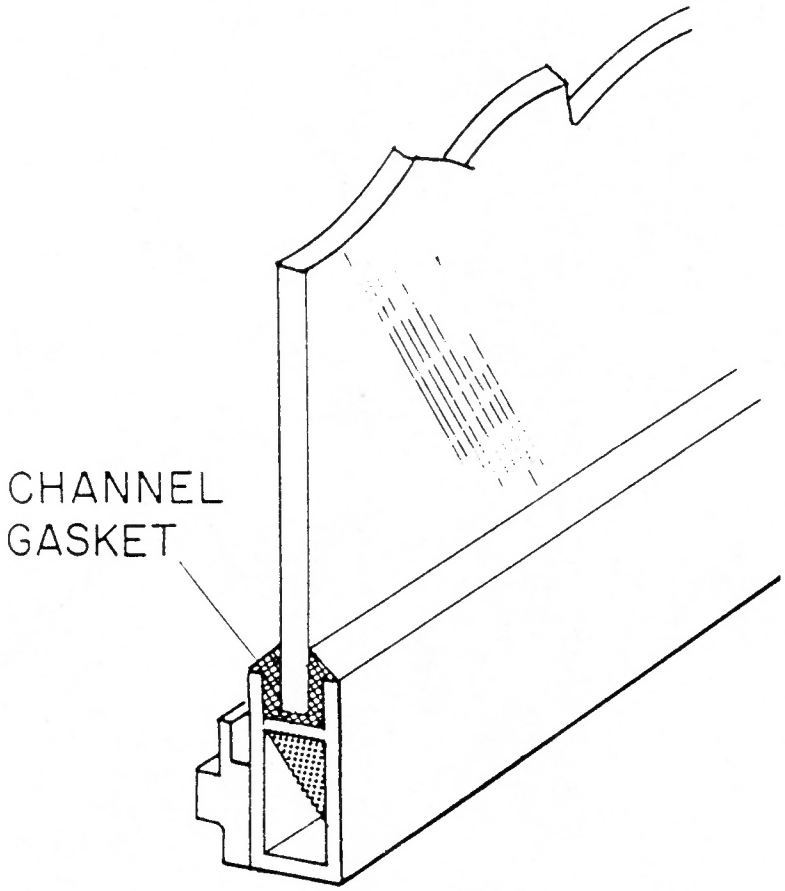

4. TREATMENT OF SASH
   - All Sashes
     - Glass channel shall be clean and free of debris.
   - Steel Sashes
     - When rust is present on surface:
       - Removal of rust recommended.
       - Application of metal primer and paint recommended.

5. SPRING CLIPS
   - Metal Sash
     - Spring clips shall be installed.
     - Maximum 12" spacing between clips.
     - Clips required within 4" of each corner.

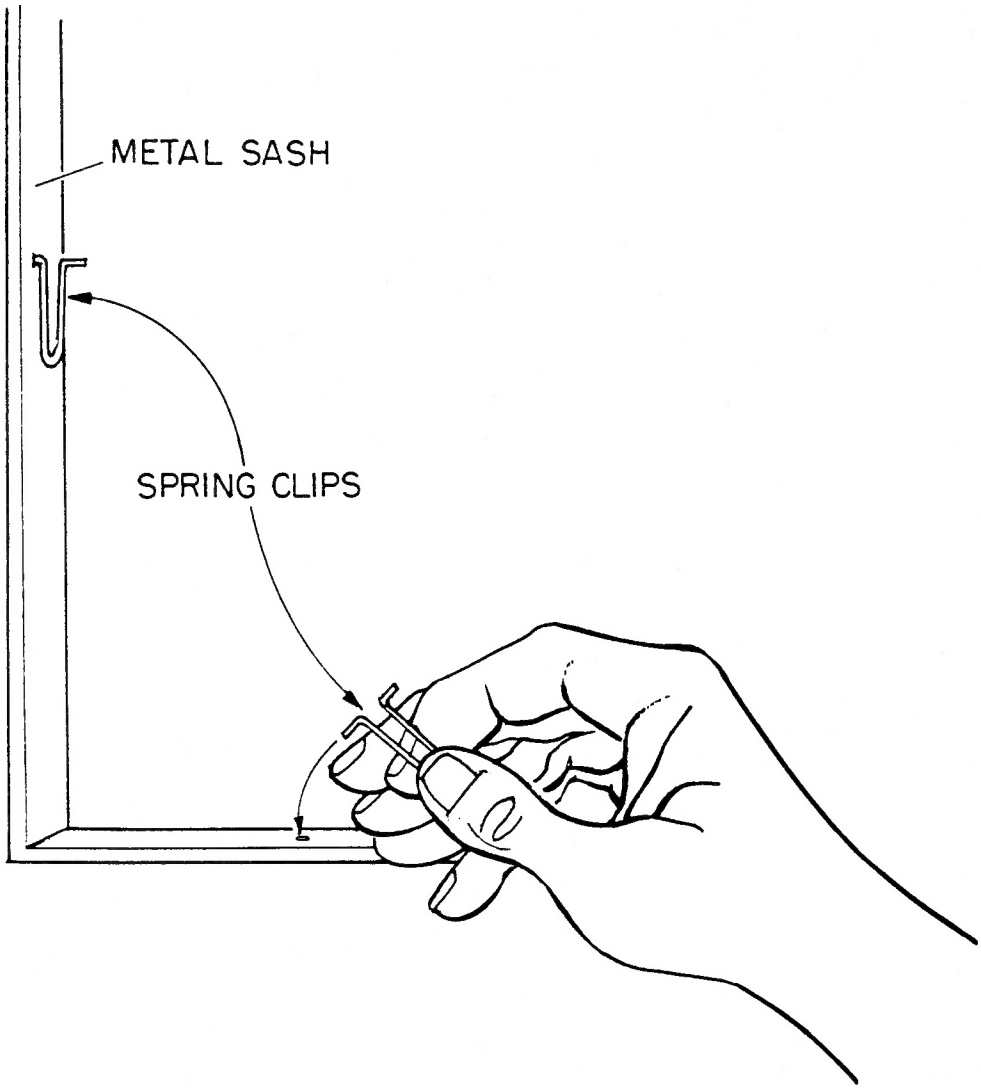

NONFEASIBILITY CRITERIA FOR GLASS REPLACEMENT

1. Small hole, 1/4" or less, is present and can be patched with clear silicone or clear glass repair tape.

2. Crack is less than 6" long, and it cannot go any farther.

3. Complete window is going to be replaced.

SECTION 7

STORM WINDOWS AND DOORS

PREFACE

The primary reason for installing storm windows and doors is to create a dead air space, thus reducing conductive heat transfer. This dead air space can only be created if the primary window is also sealed. Too often weatherization specialists believe that the installation of exterior storm windows eliminates the need to seal the primary window. However, this thinking runs contrary to the air-tightness standards for interior and exterior aluminum storm windows, which require an inside storm window to be nearly twice as tight as an exterior one. If the interior window is looser than the exterior one, moisture from inside the house will penetrate into the space between the two panes of glass and condense on the exterior pane. Therefore, the primary window must be in good condition when exterior storm windows are installed.

Storm doors often show payback periods of 20 to 50 years, because of the relatively small area being insulated (an average of 21 sq. ft.) and high cost of materials (ranging from $70 - $150). As an air tightening measure, a much more effective operation may be to upgrade and seal the primary door, leaving the existing storm door as a secondary barrier to create dead air space. When repairing a storm door, observe the requirements for safety glazing. If polycarbonate is used, fastening systems must allow for temperature related movement of the plastic while still maintaining an airtight seal.

Vestibules are also included in this category. Adding a vestibule can create a buffer zone to reduce conductive losses through the entire enclosed wall section. It also creates an effective air-lock entry making this is a measure with some interesting potential. The DOE material requirements rely on commercial availability, and there are several translucent, rigid fiberglass materials on the market. Coupled with site-orientation that takes advantage of radiant (solar) heat gains, these materials can provide an effective means to offset the structure's conductive losses.

Practices for installation of storm windows, replacement windows, multi-glazing, storm doors, and replacement doors can be found in ASTM E 737-84 (Vol. 4.07 p. 740).

See the preface to Section 6 regarding variations in glazing code standards and recent changes affecting maximum pane sizes for mobile home windows.

SECTION 7

STORM WINDOW AND DOOR STANDARDS

1. RECOMMENDED MATERIALS
   - Window Glazing
     - Glass recommended.
     - Conformance to AAMA 1701.2-85.
     - UV and scratch resistant plastic glazing acceptable.
       - Plastic film, 12 mil, minimum.
       - Plastic sheets, 1/8" thick, minimum.
   - Safety Glass
     - Conformance to ANSI Z97.1-1984 and permanently labeled.
   - Door Glazing
     - Tempered glass shall be used.
     - Doors shall be factory manufactured.
   - Hardware and Fasteners
     - Shall be aluminum, stainless steel, or other noncorrosive material.
   - Aluminum Frame
     - Conformance to ANSI/AAMA 1002.10-83.
   - Wood Frame
     - Conformance to Section 3 of ANSI/NWWDA IS 2-87.
   - Rigid Vinyl Frame
     - Conformance to ASTM D4099-89.
   - Caulking
     - Shall conform to material requirements specified in Section 4.

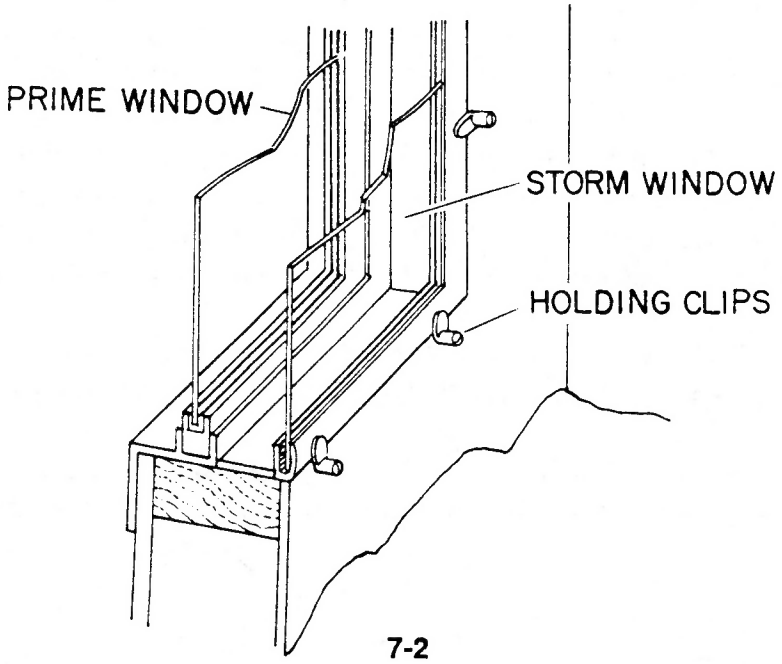

2. GLASS THICKNESS AND WEIGHT REQUIREMENTS

- Single Glazed Storm Windows
  - Removable panels requiring "set-aside" storage shall have a maximum weight of 20 pounds when installed in egress windows.
  - The maximum pane size for each frame type and thickness of glass shall be as specified below.

Glass Thickness	Aluminum or Wood Frame	Rigid Vinyl Frame
Single Strength (SS)	11 sq. ft.	Not allowed
Double Strength (DS)	15 sq. ft.	15 sq. ft. (1)
3/16" Plate	30 sq. ft.	25 sq. ft. (2)
1/4" Plate	43 sq. ft.	Not allowed

(1) Maximum vertical measurement shall be 4' with vinyl frame and DS.
(2) No vinyl-framed single lite shall exceed 25 sq. ft.

SINGLE STRENGTH MAXIMUM 11 SQ. FT.	DOUBLE STRENGTH MAXIMUM 15 SQ. FT.	3/16" PLATE MAXIMUM 30 SQ. FT.	1/4" PLATE MAXIMUM 43 SQ. FT.

3. SAFETY GLASS
- Windows
  - Required in any window adjacent to a door where:
    - The nearest vertical edge of the window is within a 24" arc of either vertical edge of the closed door, <u>and</u>
    - The bottom edge is less than 60" above the walking surface,
    - <u>Unless</u> there is an intervening wall or other permanent barrier between the door and the glazing.
  - Required in panes larger than 9 sq. ft. where:
    - The bottom edge is less than 18" above the floor, <u>and</u>
    - The top edge is more than 36" above the floor, <u>and</u>
    - A walking surface is within 36" horizontally of the glass,
    - <u>Unless</u> a protective bar exists which is:
      - Located 34" to 38" above the floor.
      - A minimum of 1 1/2" in height.
      - Capable of withstanding a horizontal load of 50 lbs. per linear foot without contacting the glass.
  - Required in exterior windows located in shower and bathtub enclosures that are less than 6' above the floor of the enclosure.
  - 1/8" plastic sheets may be used in lieu of safety glass.
- Doors
  - Required in all windows located in entrance doors.
  - Required in fixed and sliding panels of sliding doors and panels in swinging doors other than wardrobe doors.

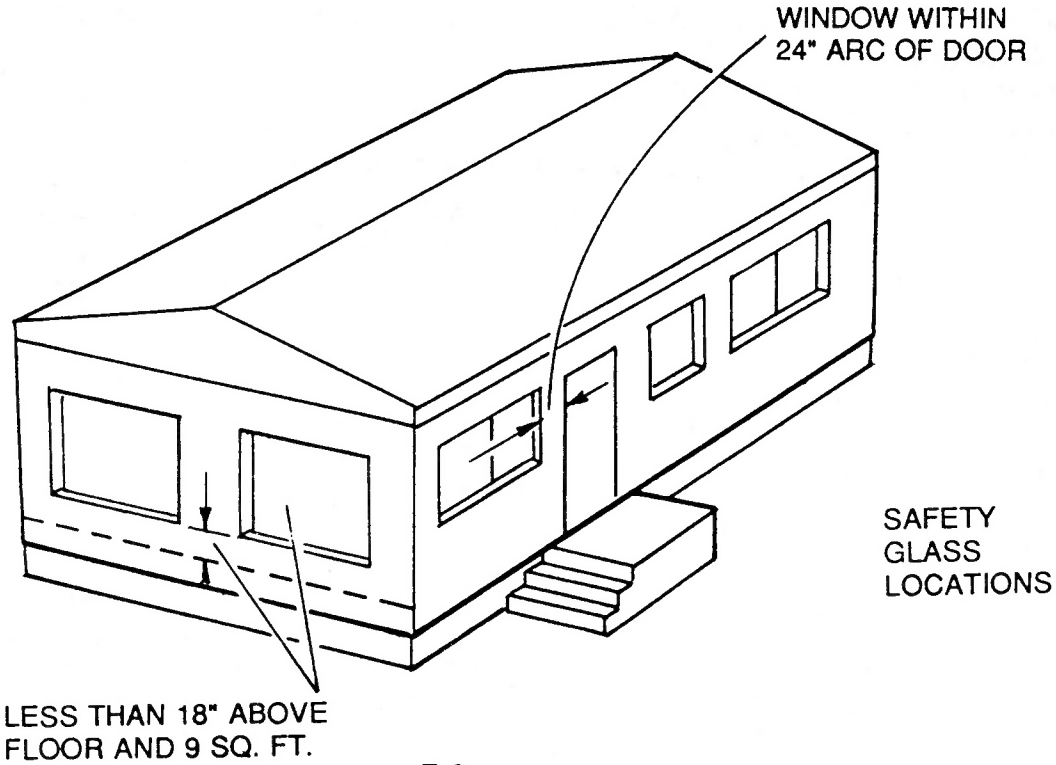

4. TYPE, SIZE, AND SHAPE
   - Storm Windows
     - Egress windows shall conform to Item 5.
     - Type size and shape of the storm window shall match the primary window, with the following exception:
       - A fixed interior storm window may be installed in front of an operable primary window.
     - Storm window frames and mullions shall align with those of the primary windows.
     - Removable storm window lites shall <u>not</u> exceed 20 sq. ft. without written client approval and statement of understanding regarding potential difficulty of removal for cleaning and storage.
   - Storm Doors
     - The storm door shall:
       - Match the primary door size.
       - Be hinged compatibly with the primary door.

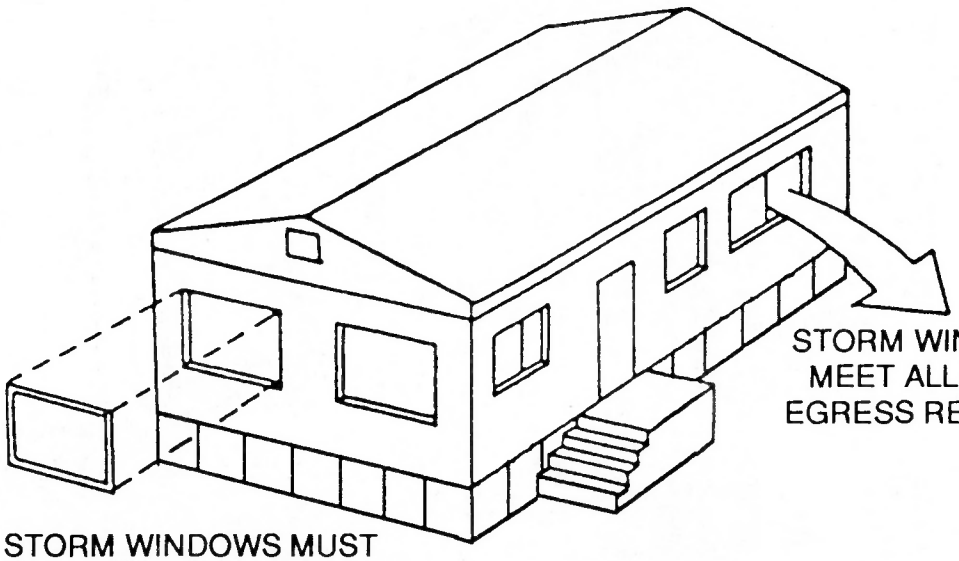

5. EGRESS WINDOWS
- All Storm Windows
  - Windows placed in emergency egress locations (bedrooms) shall be installed in conformance with AAMA 1704-85.
- Defective Primary Windows
  - A primary egress window shall operate properly before a storm window may be installed.
    - Egress windows <u>not</u> operating properly shall be repaired or replaced.
    - A storm window shall <u>not</u> be installed if the primary window is <u>not</u> repaired or replaced.
- Opening Size
  - Storm windows shall have a clear opening which is the greater of 1) that which matches the primary window, or 2) that which conforms to the following egress opening requirements:
    - Minimum clear opening area: 5 sq. ft.
    - Minimum clear horizontal dimension: 20".
    - Minimum clear vertical dimension: 24".

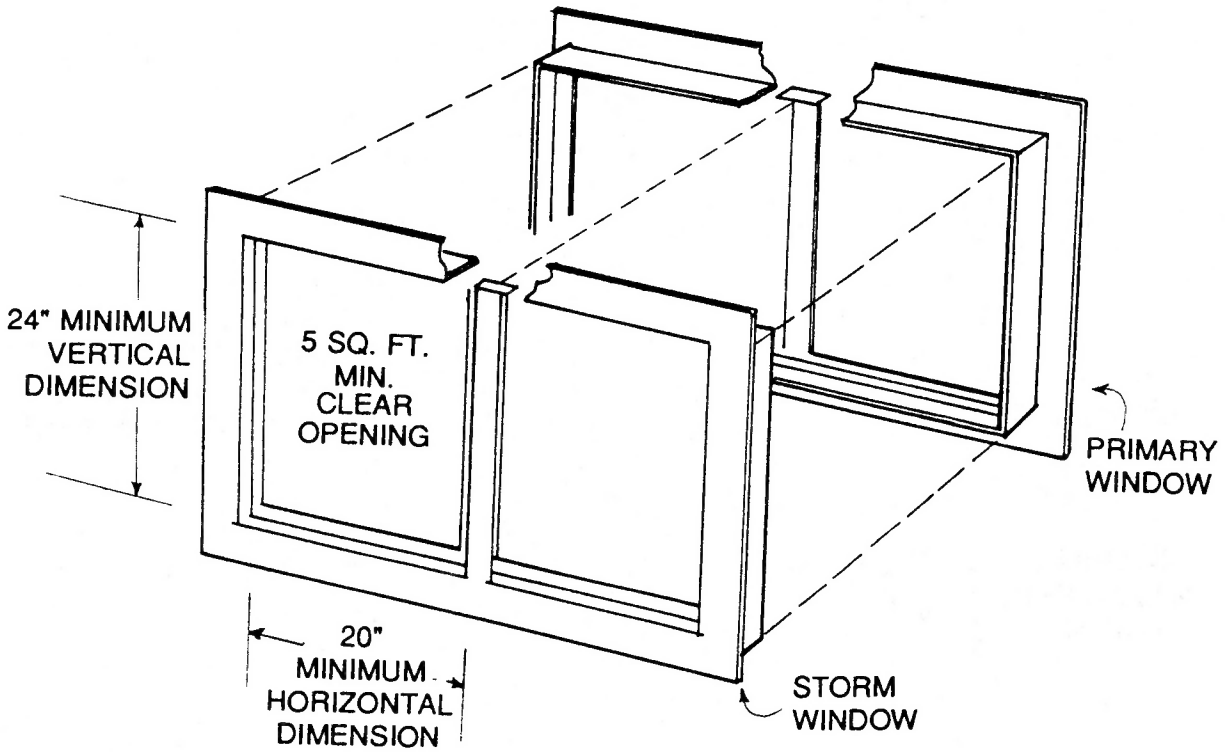

5. EGRESS WINDOWS (continued)
   - Operating Instructions
     - The client shall be provided with both written and verbal instructions for the safe operation and/or removal of all storm windows installed in egress locations.
       - Permanent instruction label attached to the window is recommended.
   - Operable Storm Windows
     - Interior and Exterior models
       - The horizontal or vertical force required to open the window for egress shall <u>not</u> exceed 20 lbs.
     - Windows shall have no more than 2 locks or latches that require operation to affect egress.

OPERABLE INTERIOR
MOUNTED STORM WINDOW
LITES:

MAXIMUM OF 20 LBS. OF
FORCE TO OPEN

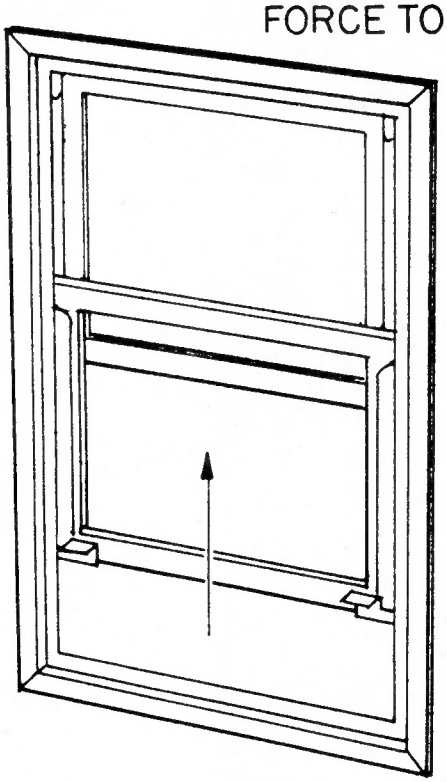

WITH A MAXIMUM OF
TWO LATCHES

5. EGRESS WINDOWS (continued)
   - Fixed Storm Windows
     - Shall be installed only on the interior.
     - Removable lites and panels (with or without sash) which require "set aside" for egress shall:
       - Have a maximum weight of 20 lbs.
       - Be removable by application of force <u>not</u> to exceed 20 lbs.
     - Storm windows that are held in place with pivot or swivel devices (rotating clips) shall have no more than 4 such devices requiring operation for egress.
       - Rotating clips shall be placed a maximum of 54" above the floor.
       - Rotating clips shall turn to open by application of force <u>not</u> exceeding 5 lbs.

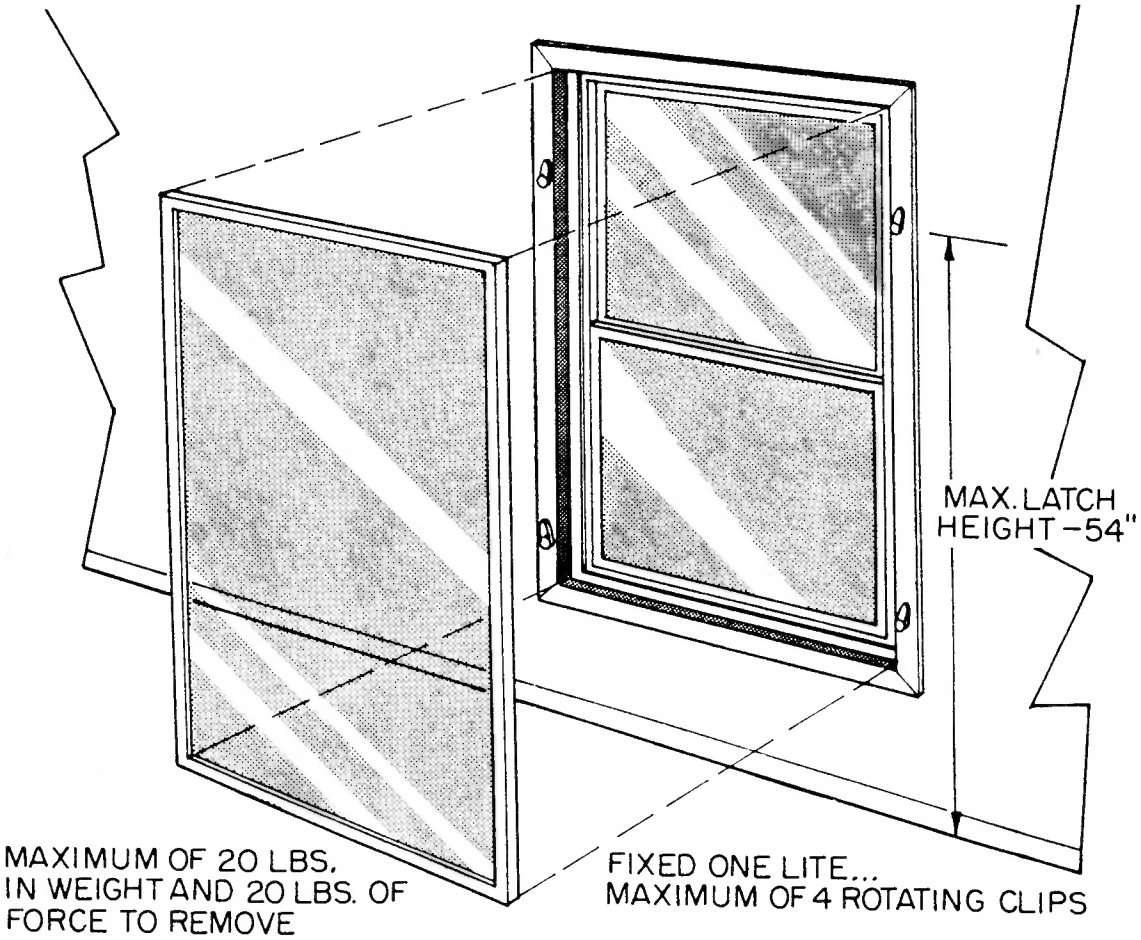

6. LOCATION REQUIREMENTS

- Interior Storm Windows
  - Windows built for interior use shall be installed <u>only</u> on the interior.
  - Windows installed on the interior shall <u>not</u> contain solar control glazing or film.
- Exterior Storm Windows
  - Windows built for exterior use shall be installed <u>only</u> on the exterior.
  - Clear glazed storm windows shall <u>not</u> be installed outside of primary windows with tinted glass or solar control film.
- Operable Primary Windows
  - Fixed storm windows may be installed over operable primary windows:
    - Only on the <u>interior</u>, and
    - Only within the limitations set forth in Items 4 and 5.

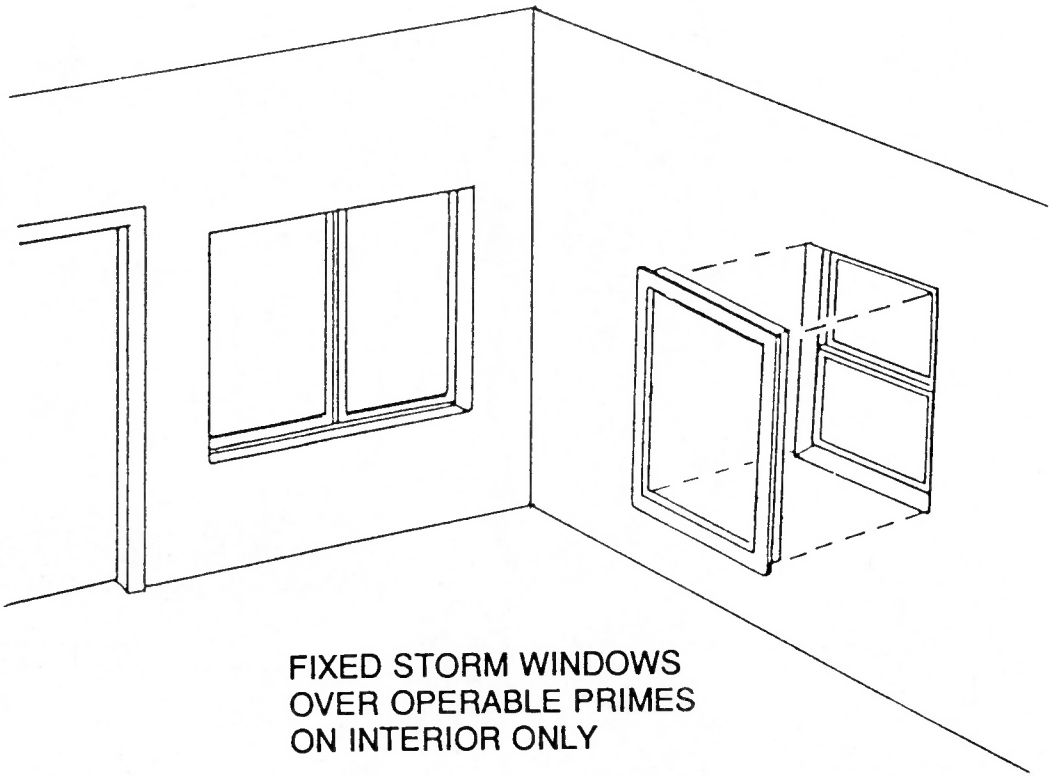

FIXED STORM WINDOWS
OVER OPERABLE PRIMES
ON INTERIOR ONLY

7. SASH REQUIREMENTS
- All Storm Windows
  - Moveable Lites and Sash Panels
    - Windows shall be constructed to allow easy and accessible removal of moveable lites and fixed sash panels for cleaning, "set-aside" storage, and egress.
    - Such removal shall <u>not</u> require special tools.
  - Sash Operation
    - All operable windows shall be operable from inside the mobile home.
    - All removable lites and sash panels shall be free of sharp edges or other conditions which could cause injury during normal use.

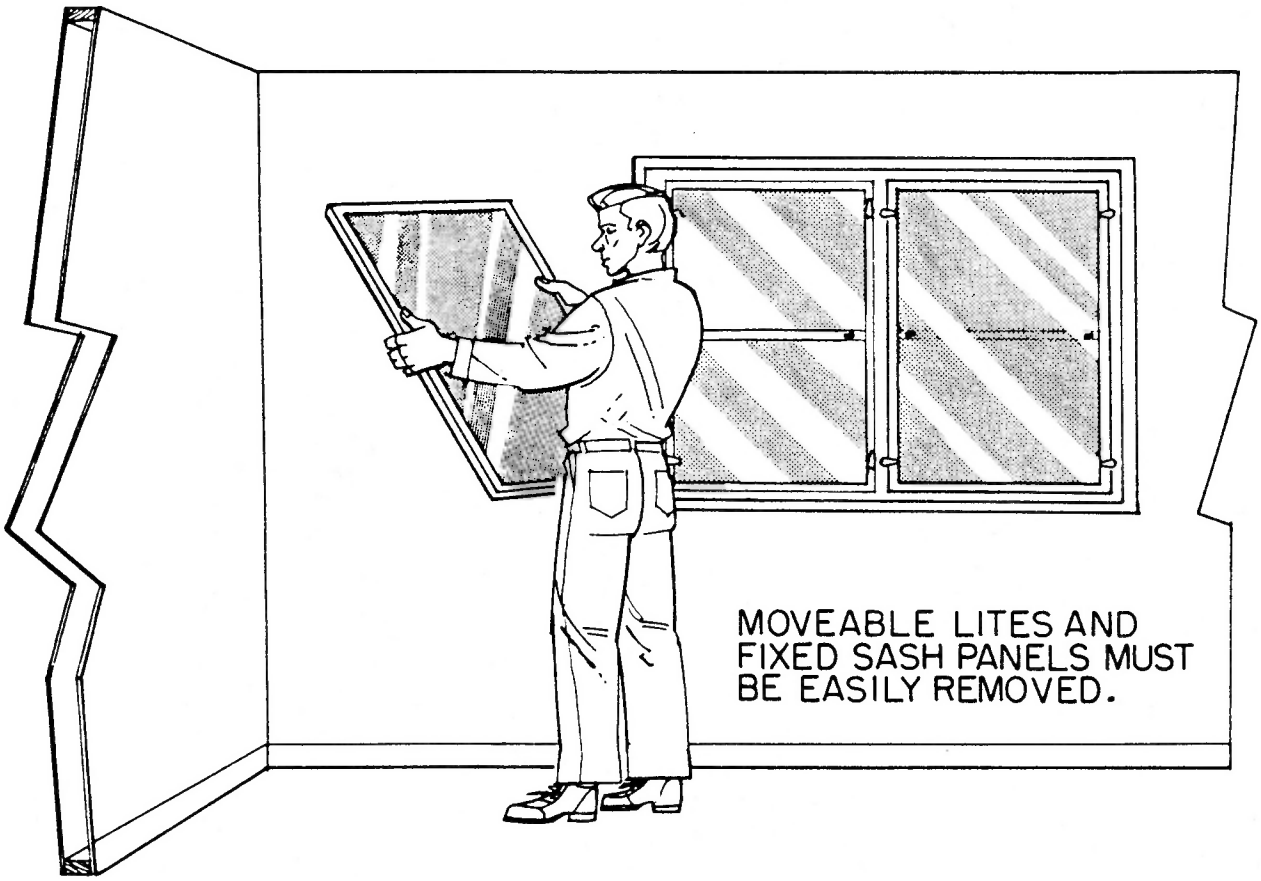

7. SASH REQUIREMENTS (continued)

- Vertical Sliders
  - Sash travel shall be controlled to prevent "free fall."
  - All vertical sliders shall be equipped with one of the following:
    - An automatic sash lock mechanism which stops at the next lower latch position when the sash is allowed to drop.
    - A pressure/friction system which will effectively prevent "free fall."

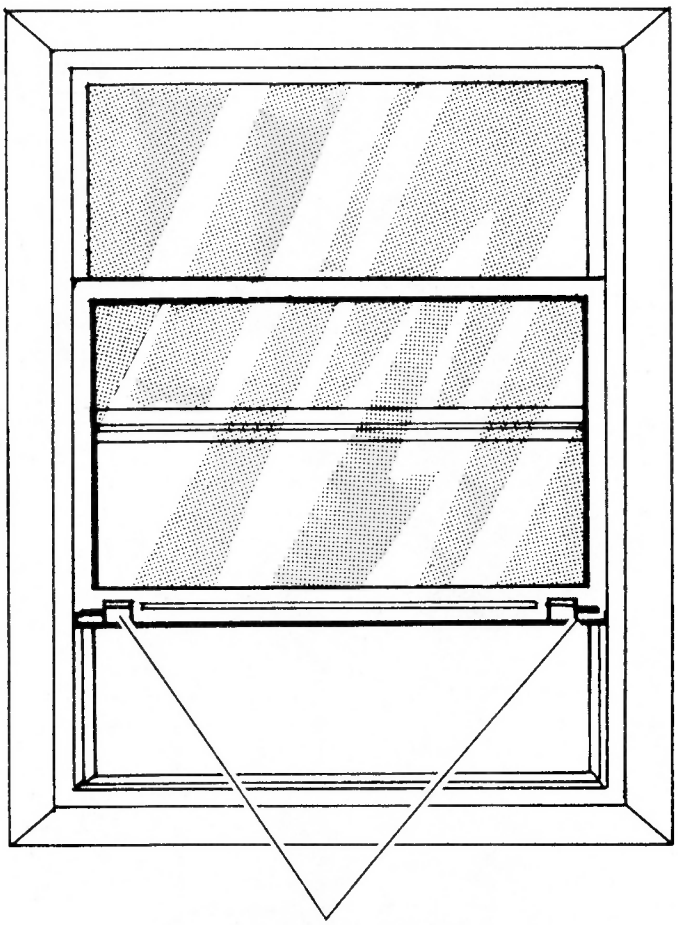

8. **WEEPAGE SYSTEM**
   - **Exterior Storm Windows**
     - **A weepage system shall be provided.**
       - **2 weep holes recommended for each track.**
       - **Holes shall be a minimum of 1/8" in diameter or equivalent.**
   - **Interior Storms**
     - **A weepage system shall <u>not</u> be provided.**

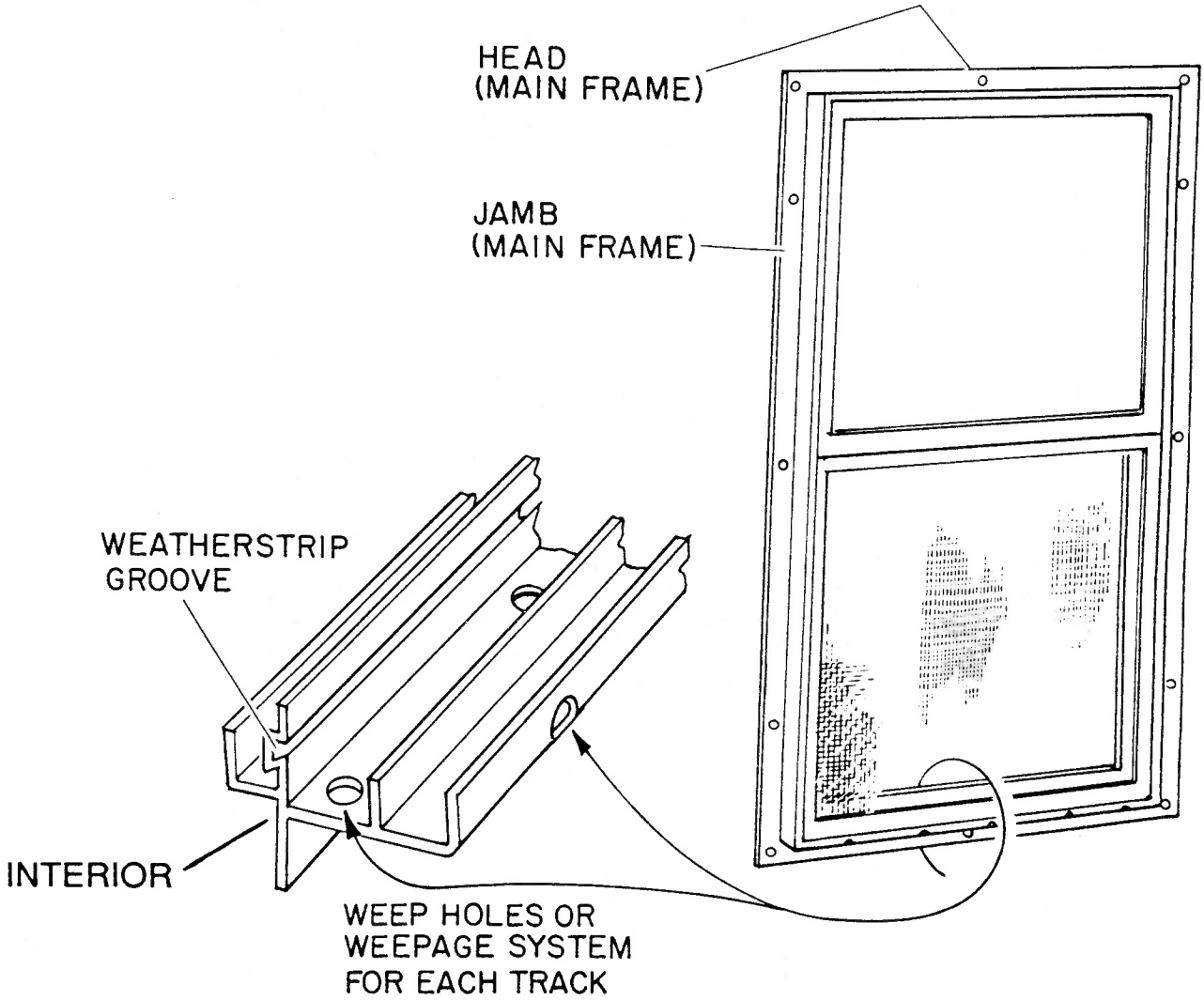

9. PRE-INSTALLATION REQUIREMENTS

- Primary Windows and Doors
  - All existing components associated with the installation shall be structurally sound.
    - All necessary repairs shall be made to facilitate a proper storm unit installation.
    - Dry rot damage shall be repaired in wooden members.
    - Water penetration points shall be sealed.
  - All mounting surface contact areas shall be smooth, clean, and free of protrusions.
  - Glass repairs shall be made as needed.
    - Cracked and broken panes shall be replaced.
    - Small holes 1/4" or less in diameter may be sealed with clear silicone caulk or clear glass repair tape.

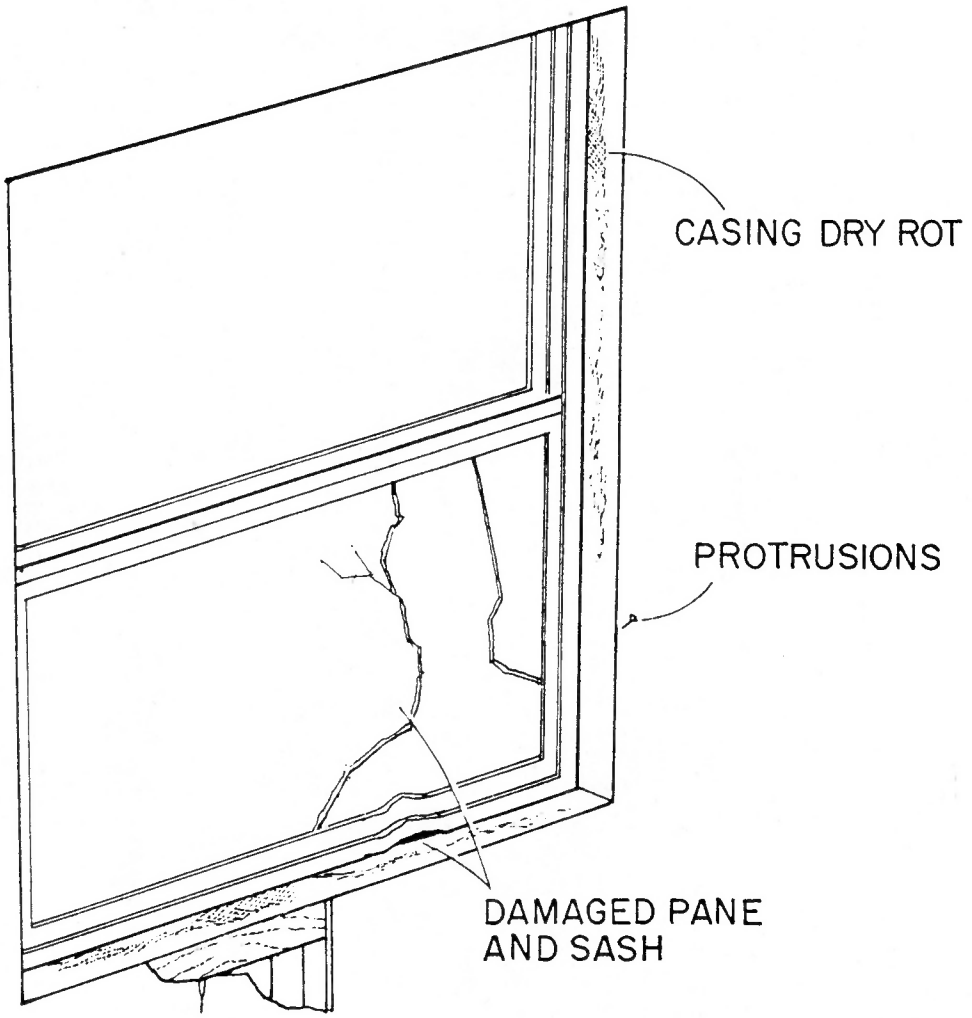

9. PRE-INSTALLATION REQUIREMENTS (continued)
   - Primary Windows
     - Significant bypasses shall be repaired to prevent moisture accumulation between the primary and storm windows.
       - Leakage at the glass perimeter shall be sealed by such means as:
         - Replacing missing or damaged gasket material when feasible.
         - Neatly sealing the perimeter with clear silicone or equivalent when gasket cannot be replaced.
       - Worn or damaged weatherstripping shall be replaced if possible.
       - All air infiltration bypasses to the wall cavity shall be repaired for interior storm window applications.
   - Primary Doors
     - The sill shall provide adequate surface for sweep contact and proper bottom seal of the storm door.

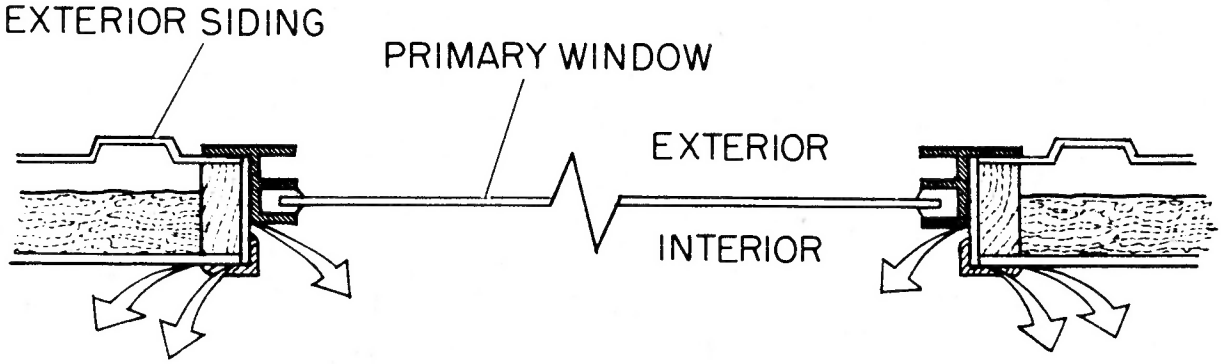

AIR LEAKS AROUND THE WINDOW OPENING MUST BE SEALED WHEN AN INTERIOR STORM WINDOW IS INSTALLED

10. THERMAL BARRIER
   - All Storm Windows and Doors
     - A thermal barrier shall be installed to prevent metal-to-metal contact between primary and storm units.
       - Vinyl or elastomeric material suited to this purpose shall be used.
       - Barrier shall be a minimum of 1/8" thick.

11. CORROSION PREVENTION
   - Dissimilar materials shall be separated by a noncorrosive material.
     - Glazing tape recommended, 1/8" thick and as wide as the narrowest mounting surface.

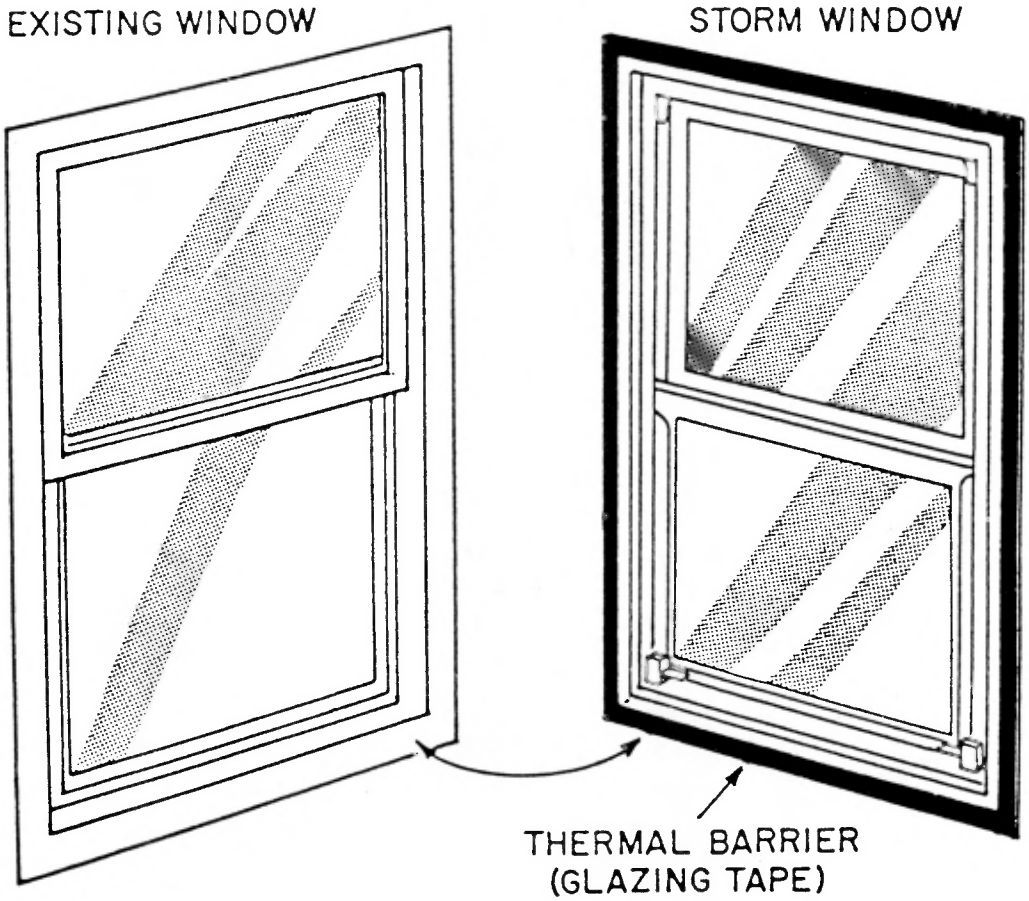

12. SEALING

- All Units
  - Sealants shall be resilient, non-hardening, long-life materials designed for the kind of application in which they are used.
  - All framed storm windows and all storm doors shall be installed with a permanent airtight seal between the storm frame and the mounting surface.
- All Interior Storm Windows
  - The storm windows shall have a seal to provide greater air tightness than the exterior primary window.
- Framed Interior Storm Windows
  - The frame shall be installed using glazing tape, caulking, or other effective sealant between the storm frame and the mounting surface so that a complete and permanent seal is provided around the entire perimeter of the storm window.

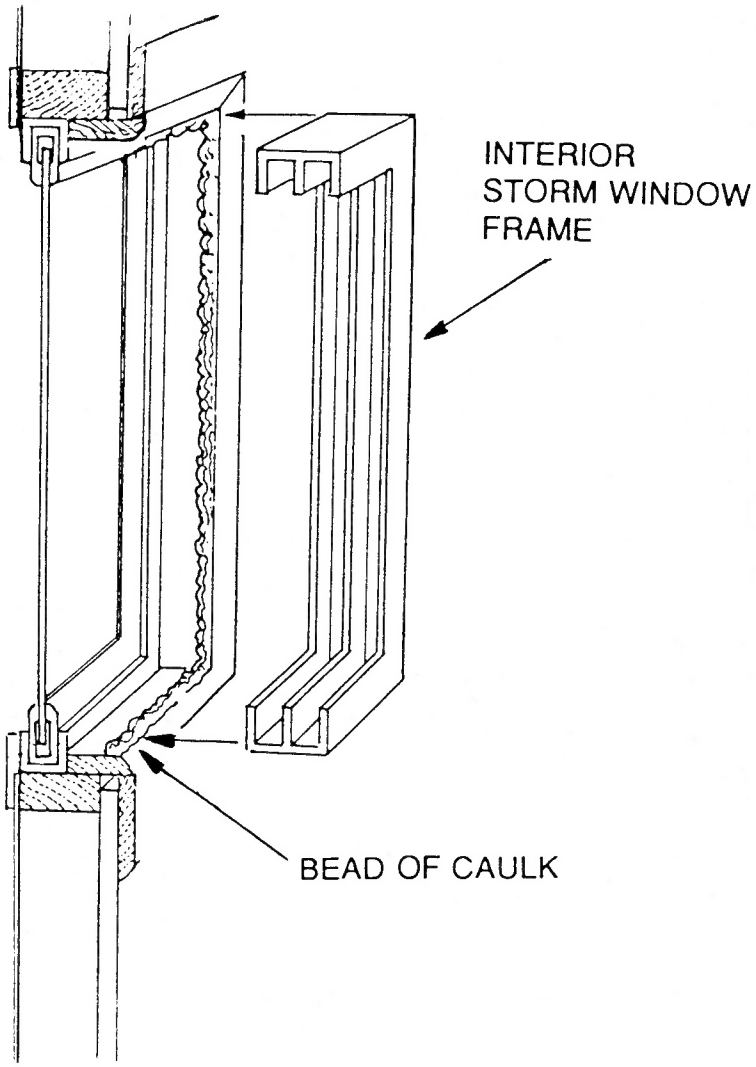

12. SEALING (continued)
   - Unframed Interior Storm Windows
     - The mounting surface shall be sealed with a minimum 1/8" thick closed cell foam tape or equivalent.
     - Panels attached with continuous magnetic strips require no additional gasket if the attachment system provides an airtight seal.
   - Storm Windows and Doors
     - All joints and gaps over 1/32" shall be sealed.
     - All exterior attachment penetrations shall be water tight.
     - Weep holes shall <u>not</u> be sealed.

13. AIR SPACE
   - All Storm Windows
     - The space between the storm and primary windows shall range between 1/2" and 4".

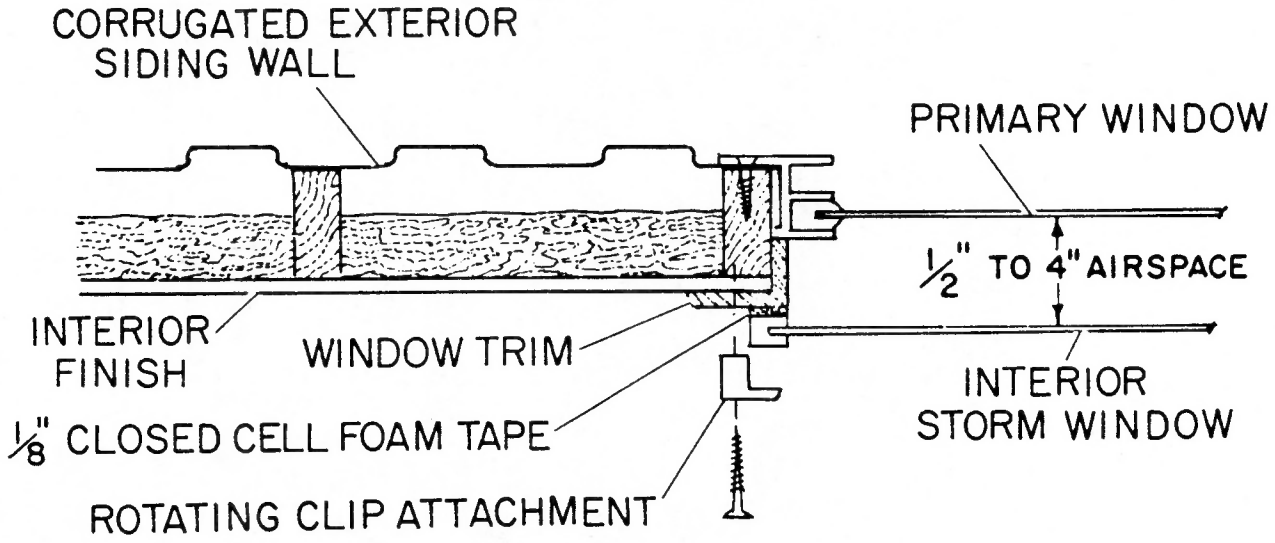

14. ATTACHMENT

- All Operable Primary Windows
  - Attachment of the storm window shall in no way impede the proper operation of the primary window.
- Exterior Storm Windows
  - Frames shall be permanently anchored with corrosion-resistant screws.
    - Screws anchoring into the framing structure of the mobile home shall penetrate the wood at least 3/4".
    - Screws shall be placed within 4" of each corner.
    - For metal frames, additional screws shall be placed a maximum of 12" apart, with a minimum of 3 screws on each side exceeding 18" in length.
    - For vinyl frames, additional screws shall be placed a maximum of 8" apart, with a minimum of 3 screws on each side exceeding 14" in length.

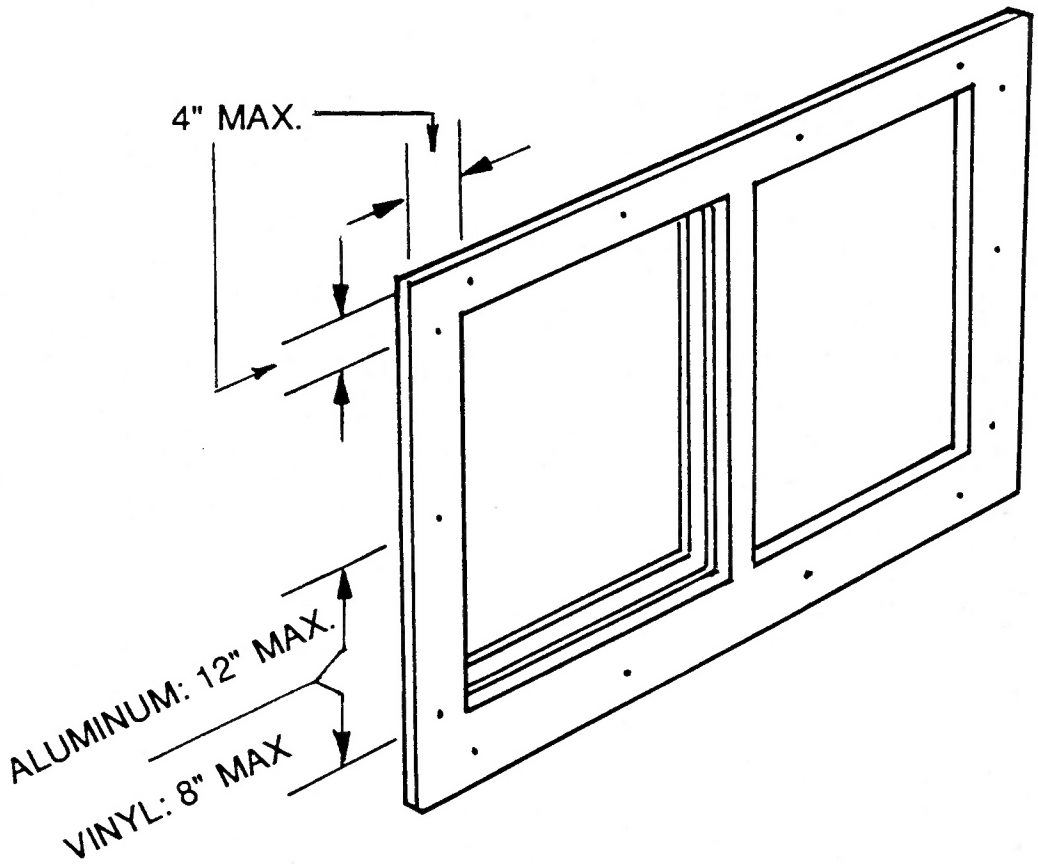

14. ATTACHMENT (continued)
- Framed Interior Storm Windows
  - Windows with attachment fins shall be installed as prescribed above for Exterior Storm Windows.
  - Box-frame windows without fins:
    - Shall be securely attached within the window opening with screws.
    - At least 2 screws required in each jamb when frame is pre-assembled.
    - At least 2 screws required in each piece when frame components are independent.
    - Shims shall be installed as needed to prevent torquing or warping the frame.
- Unframed Interior Storm Windows
  - Fixed storm windows secured with rotating clips and <u>not</u> in egress locations shall have clips located within 4" of each corner and elsewhere as needed to provide a tight seal around the entire sash perimeter.
  - Fixed plastic-glazed windows may be secured with magnetic or velcro-type strips.
    - Attachments shall be permanently bonded to the sash mounting surface.
    - Attachments shall have sufficient holding strength to retain the panel securely and maintain an airtight seal.

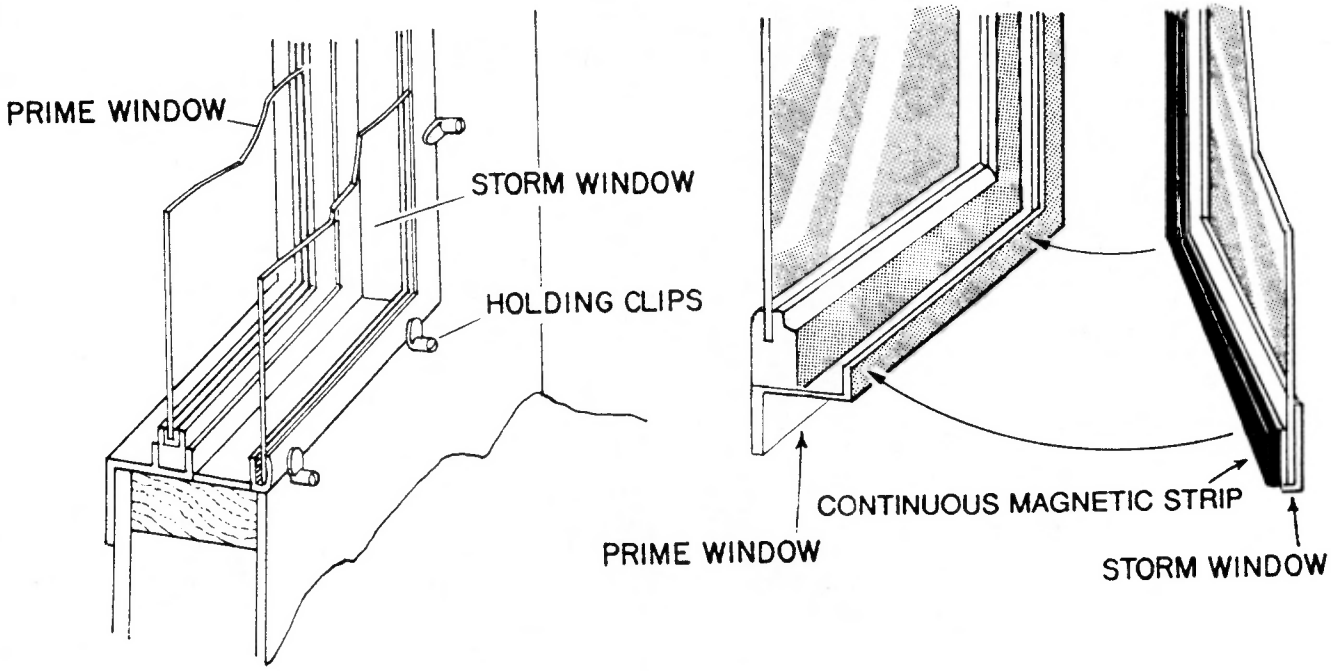

NONFEASIBILITY CRITERIA FOR STORM WINDOWS

1. Storm windows shall not be installed over:
   - A primary unit with dual glazing.
   - A primary window equipped with solar film or glazing as specified in Item 6.
   - Windows that do not meet the egress requirement.

NONFEASIBILITY CRITERIA FOR STORM DOORS

1. Storm doors shall not be installed over:
   - An existing frame which is not secure and cannot be repaired.
   - An existing insulated door.

SECTION 8

EVAPORATIVE COOLER AND AIR CONDITIONER VENT COVERS

PREFACE

The blower door will almost always reveal several hundred CFM_{50} leakage through an uncovered evaporative cooler cover outlet. This represents a large wintertime heat loss, which makes an interior cover a very cost effective weatherization measure.

Window-mount air conditioners must also be addressed, as there is usually a significant amount of leakage through the unit. It should first be determined if the air conditioner is left in the window during the winter or taken out. If it is left in, a blower door test will reveal the magnitude of leakage through the unit and help determine if a winter cover is needed.

A variety of covering devices are commercially available, and special sizes can be ordered from some manufacturers. Innovative techniques using custom-made trim and buildout materials make it possible to install covers on most evaporative coolers and air conditioners.

Vent covers are installed on the interior because of convenience and increased effectiveness. They often prevent leakage through the thermal envelope which cannot be accomplished by placing a cover over the appliance outside the home.

Client education is the final step--and a crucial one. The occupants must know how to install and remove the cover and understand the importance of using it every winter.

SECTION 8

EVAPORATIVE COOLER AND AIR CONDITIONER VENT COVER STANDARDS

1. **RECOMMENDED MATERIALS**
   - **All types**
     - **Maximum one perm rating.**
   - **Plastic**
     - **Rigid plastic, heavy vinyl, or 12 mil film.**
     - **12 mil film units shall be framed with aluminum or rigid plastic.**
     - **One piece molded rigid plastic type recommended.**
   - **Wood**
     - **Finished wood only.**
   - **Metal**
     - **Aluminum, galvanized, or painted metal.**

EVAPORATIVE COOLER COVER

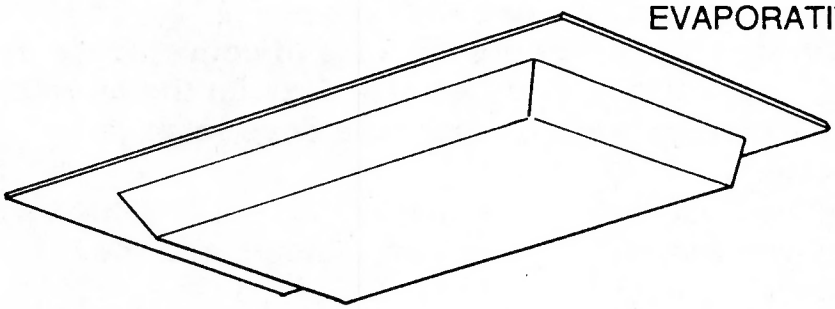

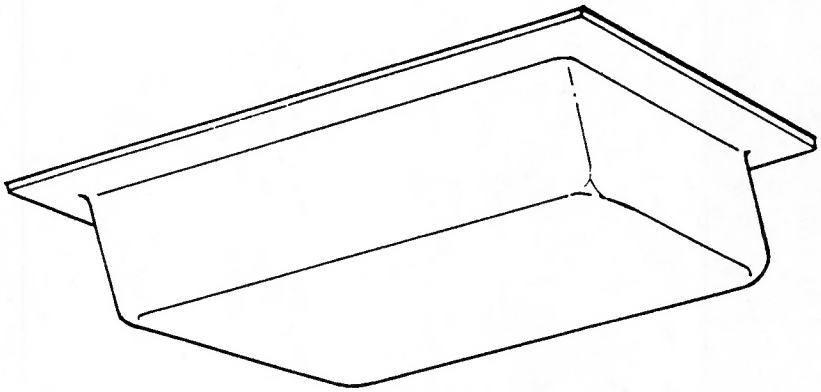

WINDOW-MOUNT AIR CONDITIONER COVER

2. LOCATION

- **Covers shall be installed:**
  - **To block infiltration.**
  - **On the interior of the home**
  - **On both wall and ceiling units.**

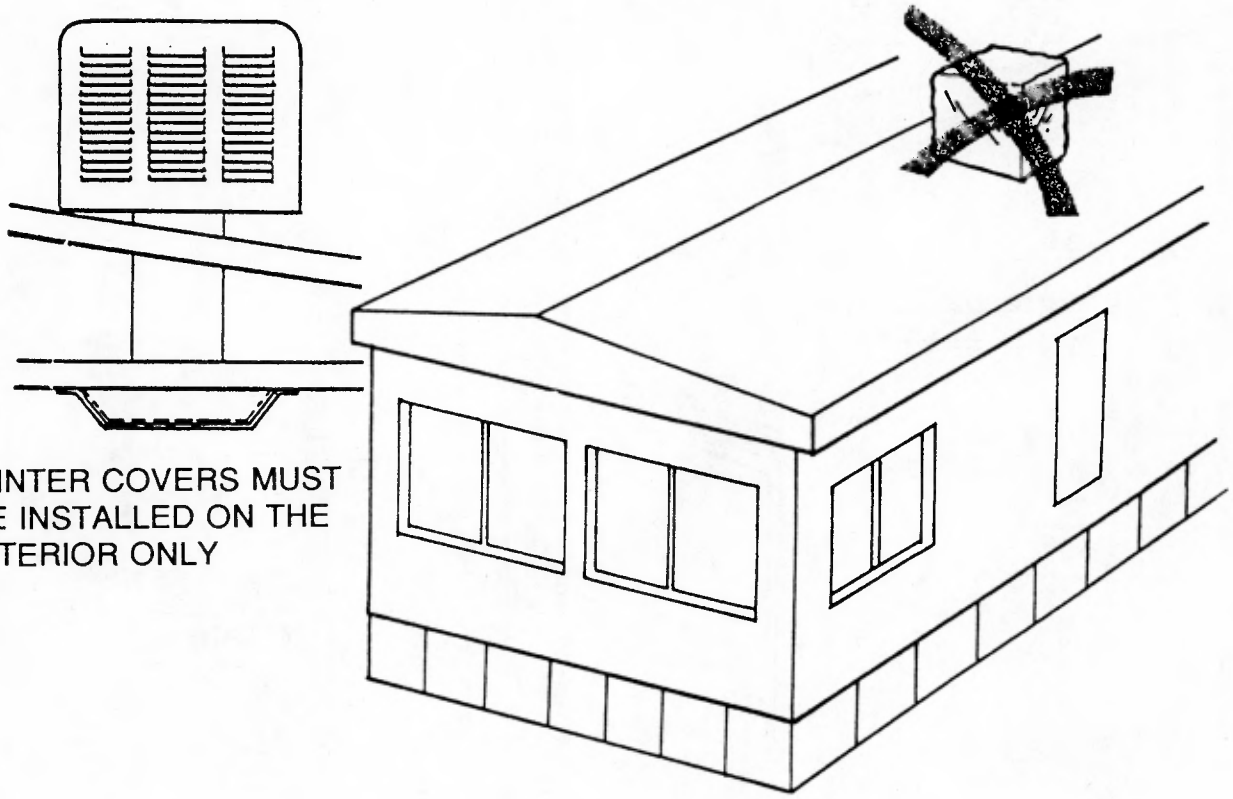

3. EASY REMOVAL

- **Cover shall be easy to install and remove.**
- **Magnetic strips or clips recommended.**

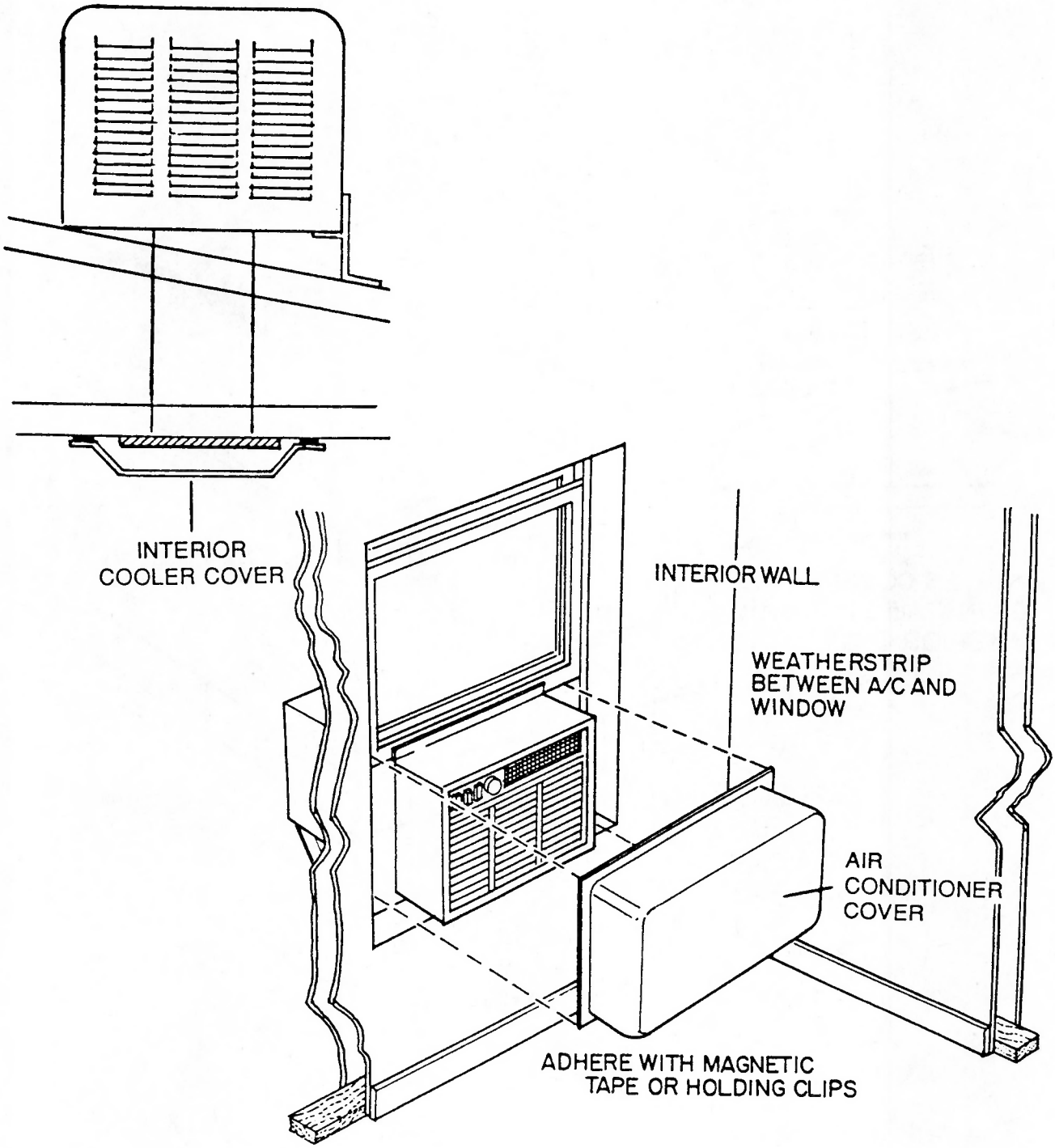

4. **MOUNTING FLANGE**
   - **The edge of the cover shall be a minimum of 1/2" wide to accommodate attachment and weatherstripping.**

5. **WEATHERSTRIPPING**
   - **Perimeter of cover shall be sealed against air leakage.**
   - **Open cell foam or hollow gasket weatherstripping may be used.**
   - **Continuous magnetic strip without gaps may be used in lieu of weatherstripping if an airtight seal is achieved.**

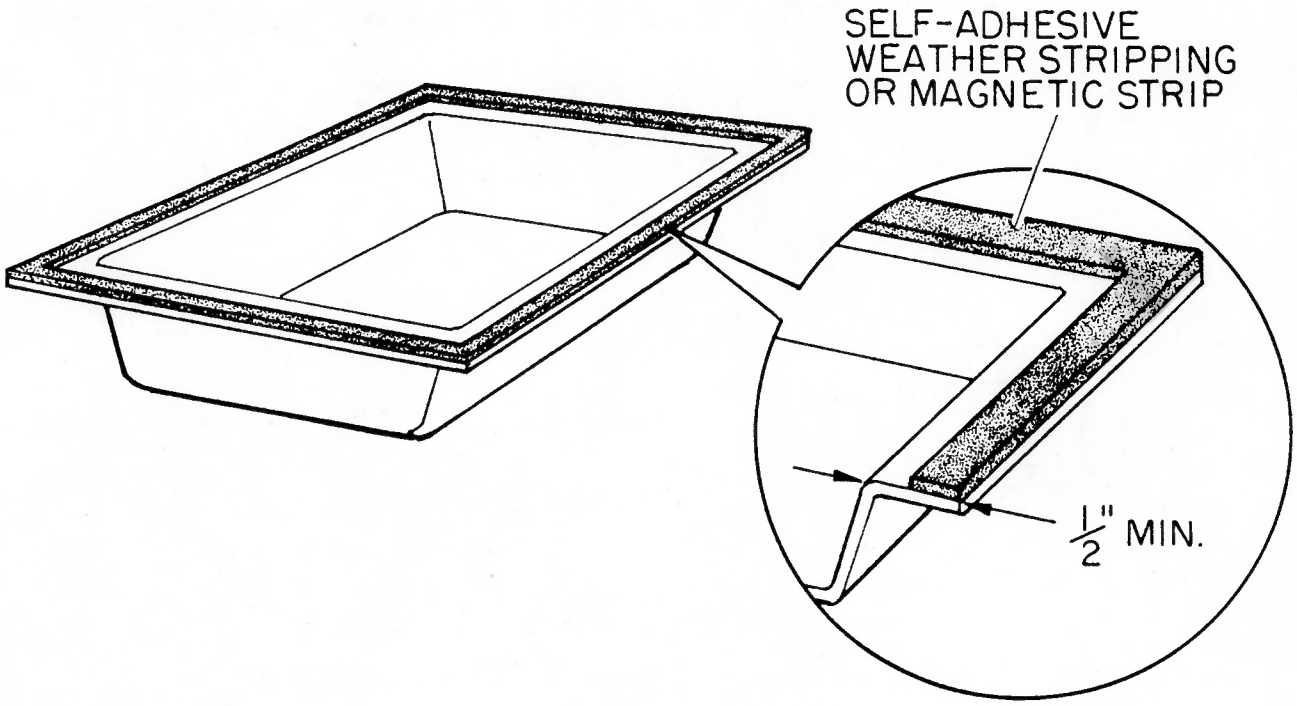

6. ATTACHMENT
- Screws
  - Shall penetrate wood framework at least 1/2", or in some other way provide permanent, secure attachment.
- Rotating Clips
  - Barrel of clip shall rest on mounting surface.
  - Clips shall be placed within 4" of each corner, minimum of two clips per side.
  - Clip and cover shall be made of compatible materials, and only metal shall be used with metal frames.
- Magnetic Tape
  - Tape shall be:
    - Permanently attached to mounting surface and cover.
    - Adequate to hold cover securely in place.
    - Continuous around the entire perimeter if weatherstripping is <u>not</u> used.
- Molly Bolts and Other Expansion Anchors
  - Mounting surface shall be appropriate and conform to manufacturer's installation specifications.

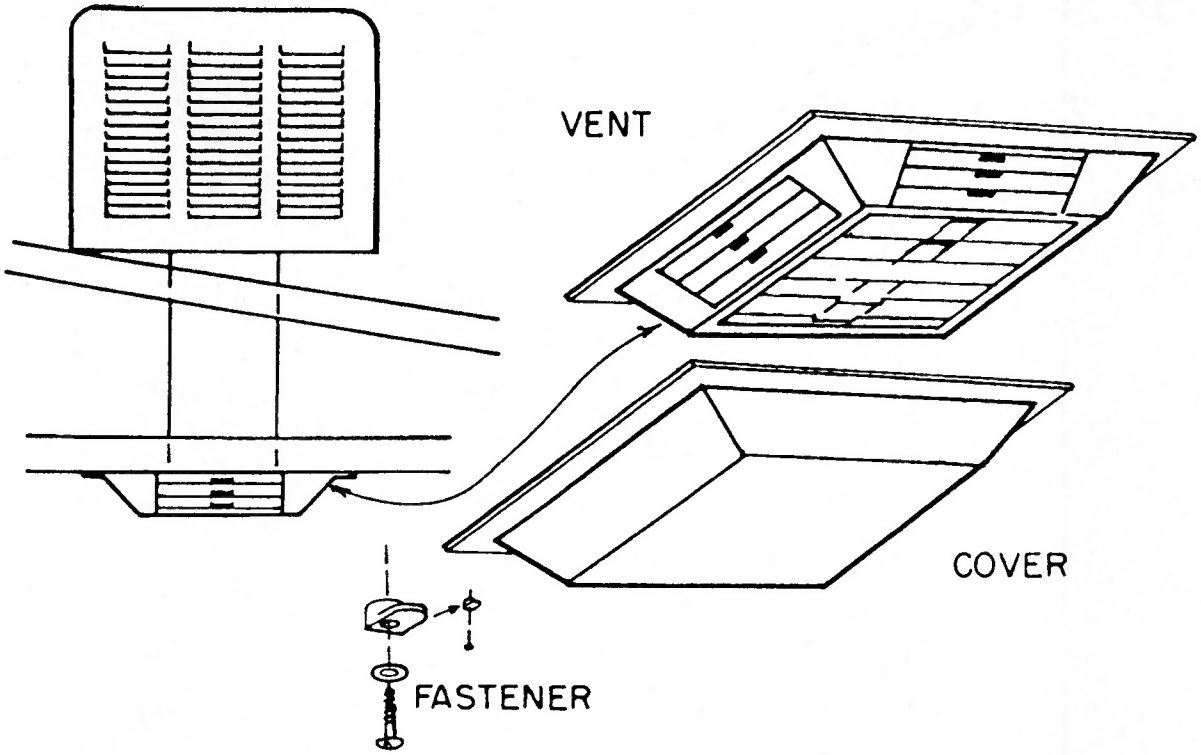

NONFEASIBILITY CRITERIA FOR EVAPORATIVE COOLER VENT COVERS

1. Already properly installed.
2. Shown not cost effective by blower door analysis.
3. Installation would bring home below the minimum ventilation requirement.
4. Electrical connections/plugs interfere with installation and modification is not feasible.
5. Ceiling damage from cooler leaks, unless repairs can be made.
6. Vent opening is so close to wall that installation of the cover is impossible.
7. Cooler vent is shared with a heating system or air conditioning system.

NONFEASIBILITY CRITERIA FOR AIR CONDITIONER VENT COVERS

1. Already properly installed.
2. Shown not cost effective by blower door analysis.
3. Installation would bring home below minimum ventilation requirement.

SECTION 9

WATER HEATER INSULATION

PREFACE

It is customary to insulate an attic to R-19 or more, while water heaters are commonly insulated with R-6 or less. When the high internal temperature of a water heater is considered, it is obvious that additional insulation is highly desirable and cost effective.

The R-19 attic insulation is providing a thermal barrier for household temperature in the 70°F range. But hot water is usually stored at 120° to 140°F, approximately twice as hot, with less than a third of the insulation.

This is why externally applied water heater insulation is a high priority item. It will always be installed unless prohibited by the non-feasibility criteria listed at the end of this section. (An existing blanket, defective water heater, and hazardous conditions constitute the main reasons to pass up this measure.)

Installation of water heater insulation is a valuable service which will significantly reduce energy waste. The client will appreciate the cost savings, and the installation crew will enjoy the satisfaction of performing a valued service.

SECTION 9

WATER HEATER INSULATION STANDARDS

1. RECOMMENDED MATERIALS
   - Blanket Insulation
     - Conformance to ASTM C592-80.
     - Mineral Fiber Only.
   - High Temperature
     - Conformance to ASTM 892-79.
   - Facing
     - Shall have vinyl or foil facing.
     - Maximum flame spread rating of 25.

2. R-VALUE
   - R-6 minimum.
   - R-12 recommended.

3. TAPE
   - Shall be vinyl tape or metallic tape with fiber scrim appropriate for this type of application.
   - Duct tape <u>not</u> allowed.
   - Maximum flame spread rating of 25.

4. STRAPS
   - Fiberglass recommended.
   - Only strapping and buckles appropriate for this application shall be used.

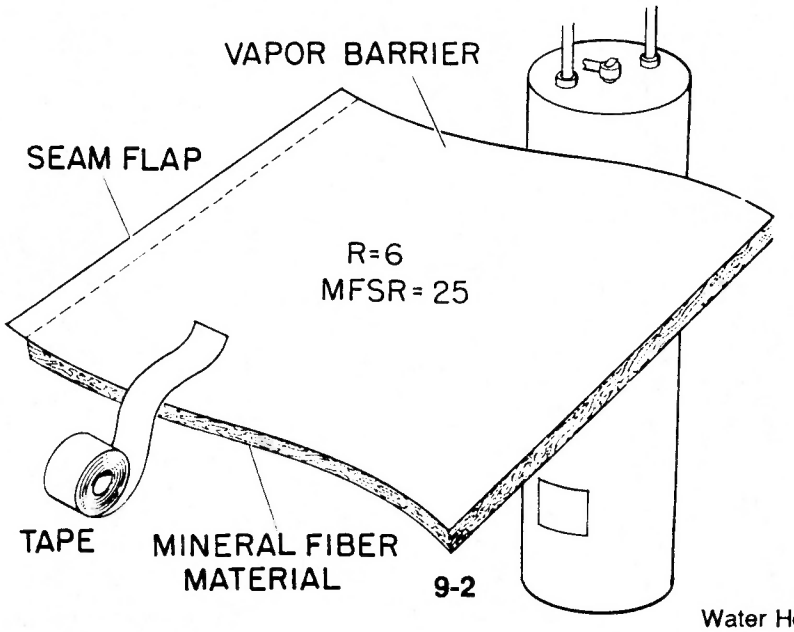

5. **TOP OF UNIT**
   - **Electric Water Heaters**
     - **Shall be insulated.**
   - **Gas Water Heaters**
     - **Shall <u>not</u> be insulated.**

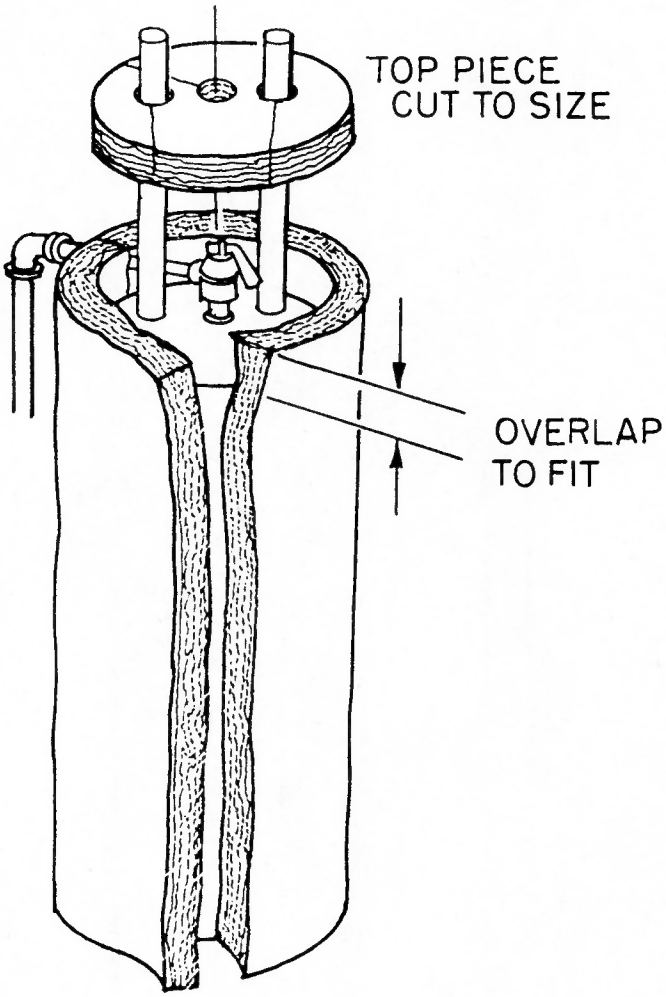

NOTE: FOR ELECTRIC UNITS ONLY

6. **SEAMS**
   - **All Water Heaters**
     - **Top and sides shall be sealed with tape.**
     - **Exposed fiberglass edges <u>not</u> allowed.**
     - **Mechanical reinforcement of vertical seam prior to taping is recommended.**
       - **Stitch staples recommended.**
       - **Edge flaps shall be folded under for double thickness along both stapling flanges.**

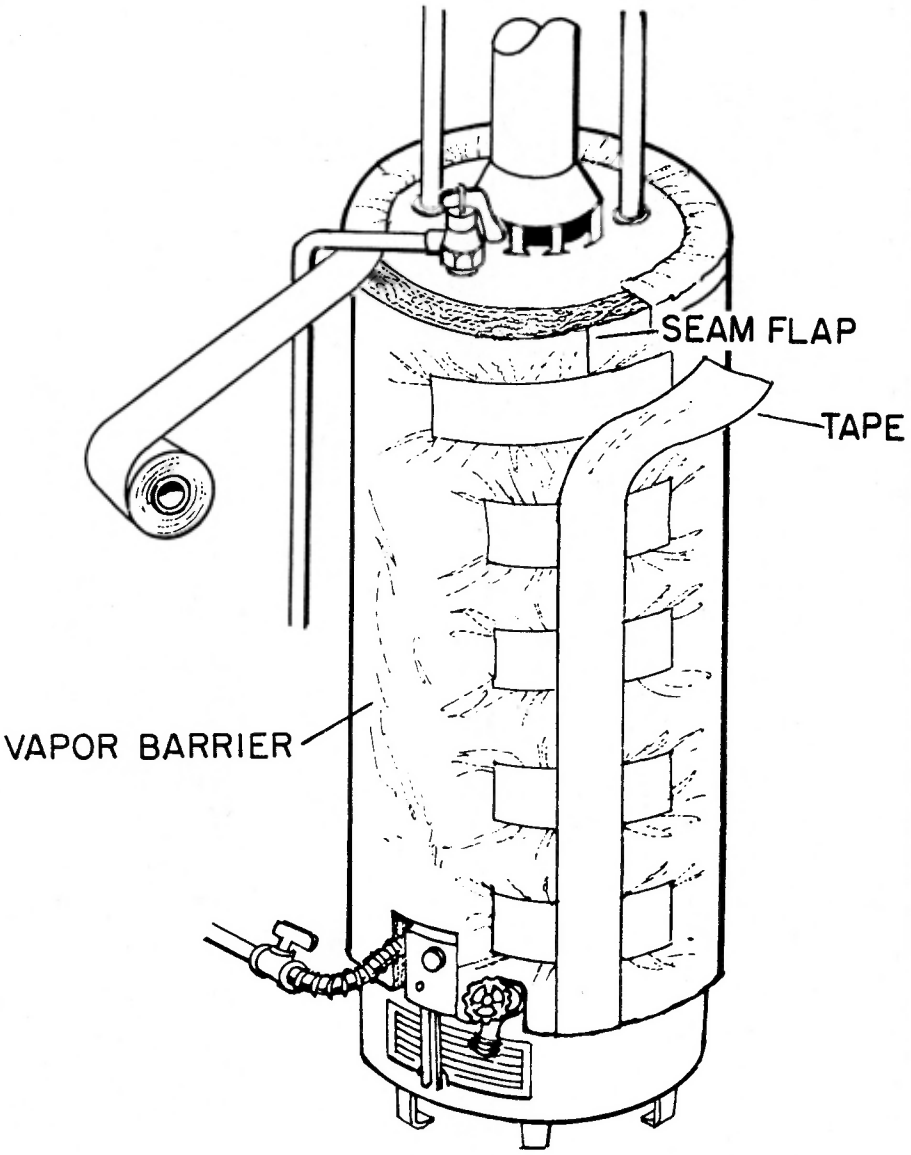

7. **BLANKET STRAPS**
   - **All Water Heaters**
     - **A minimum of two straps shall be installed in addition to tape.**
     - **Buckles or other mechanical connectors shall be used to secure the straps.**
     - **Both straps shall provide a snug fit, with compression of blanket directly under the strap only.**
   - **Gas Water Heaters**
     - **Straps shall be installed within 2" of the top and within 2" of the bottom of the blanket.**
     - **Strap shall <u>not</u> be installed over the top of the thermostat control unit.**
   - **Electric Water Heaters**
     - **Straps shall be installed:**
       - **Within 2" of the top of the blanket.**
       - **Within 2" of the bottom if possible, or as close to the bottom as feasible.**
     - **Strap shall <u>not</u> be installed across the thermostat cover plate.**

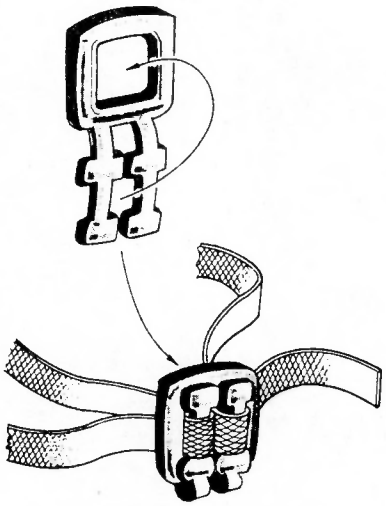

AN EXAMPLE OF A STRAP AND BUCKLE

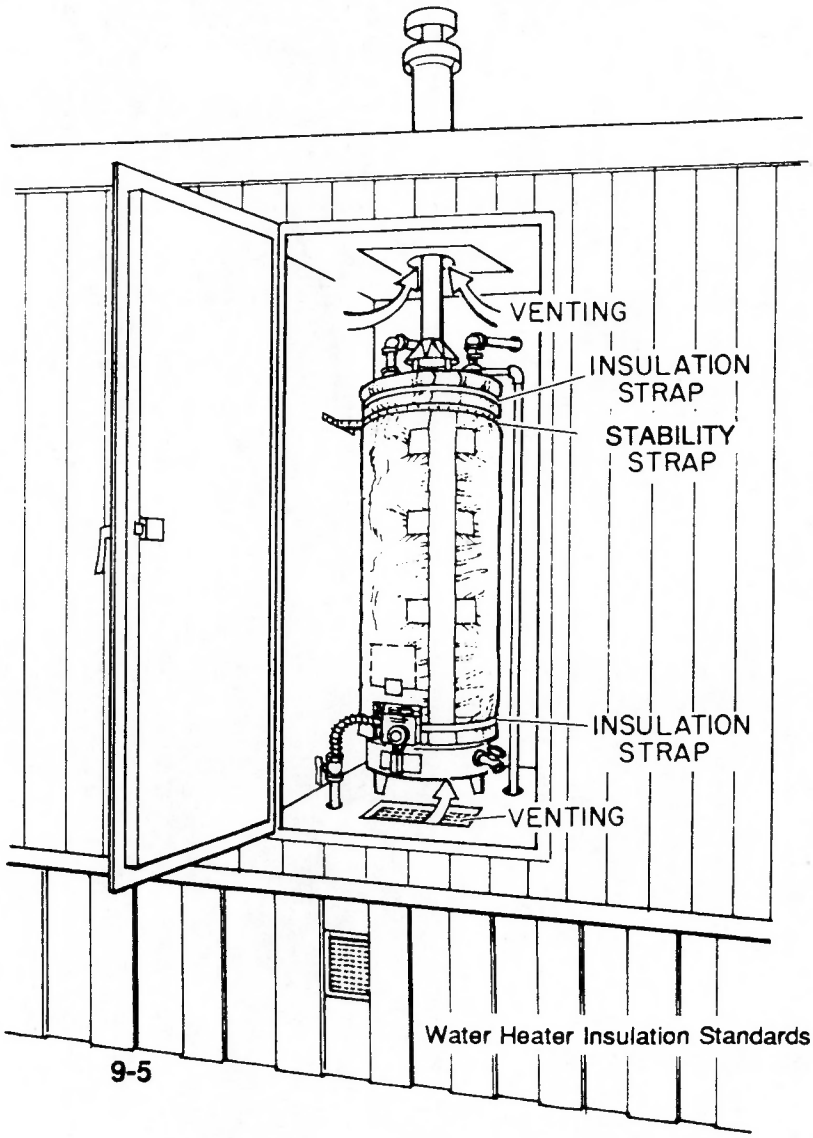

8. **PRESSURE/TEMPERATURE RELIEF VALVE**
   - **All Water Heaters**
     - **A P/T valve shall be:**
       - **Present.**
       - **Located at the top of the tank.**
       - **Positioned within 6" of the tank.**
     - **Protection requirements:**
       - **Valve shall <u>not</u> be covered by the blanket.**
       - **End of drain line shall <u>not</u> be covered or obstructed by the blanket.**

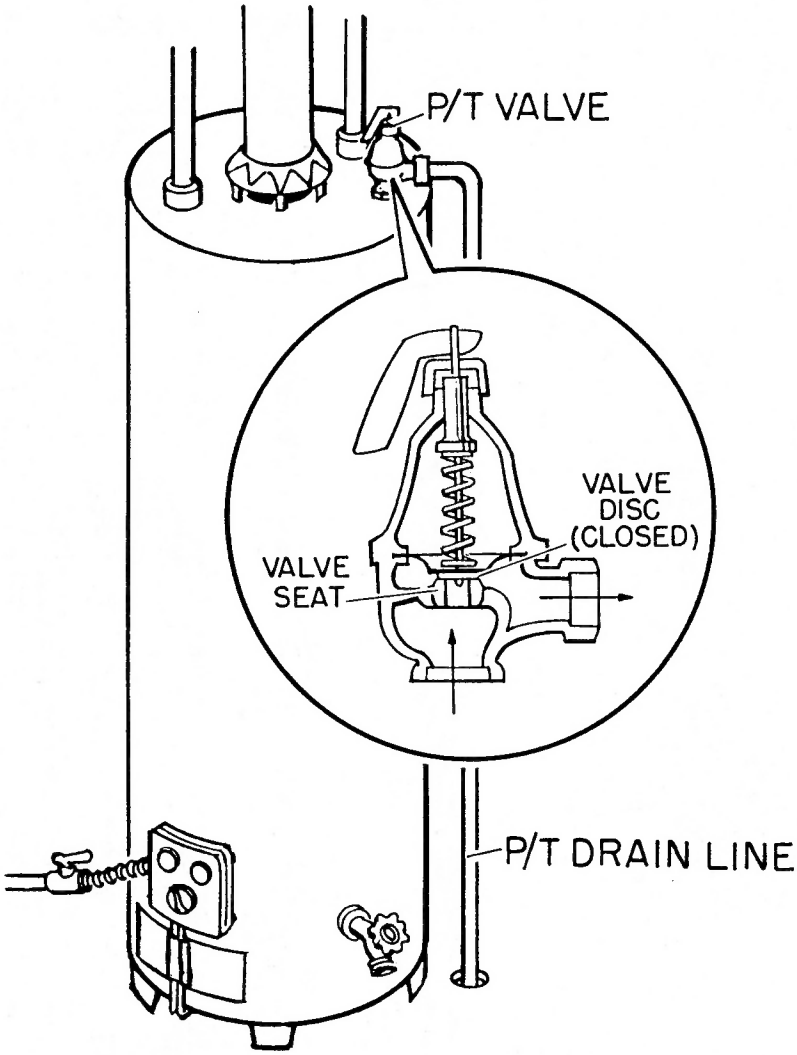

9. **DRAIN VALVE**
   - **All Water Heaters**
     - **The drain valve shall not be covered by the blanket.**
     - **Minimum 1" clearance between the blanket and the valve required.**

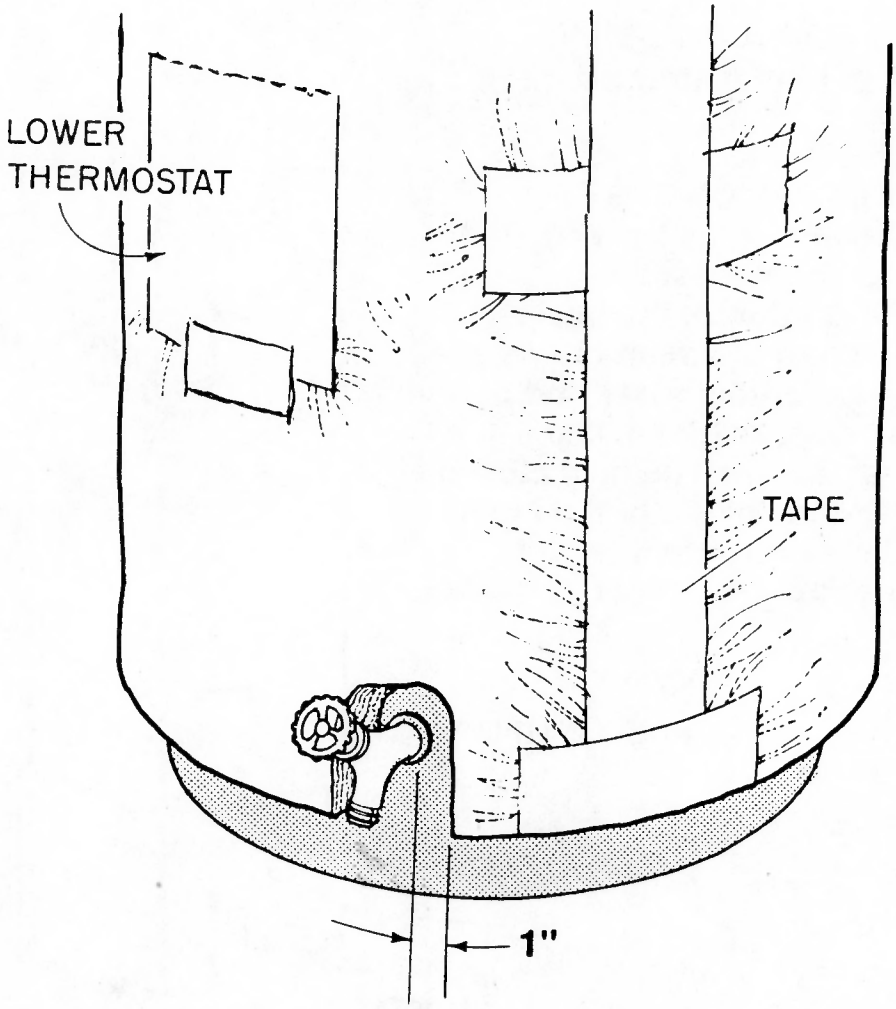

GAS WATER HEATERS

10. THERMOSTAT CONTROL UNIT
    - Shall not be covered by blanket or tape.
    - Strap shall not be placed over front of control unit.

11. BURNER ACCESS DOOR AND DRAFT HOOD
    - Minimum 3" clearance required between blanket or tape and:
      - Burner access door.
      - Draft hood.

12. GAS APPLIANCE VALVE
    - Shall not be covered.

13. COMBUSTION AIR SUPPLY
    - Shall not be obstructed.

14. OPERATION AND SAFETY INSTRUCTIONS
    - Instructions shall be identified and easily accessible.
      - The portion of the blanket covering the instructions shall be cut on the sides and bottom to create a liftable flap.
      - The flap shall be held closed with tape at the bottom and labeled in permanent ink: "Instructions Under This Flap."

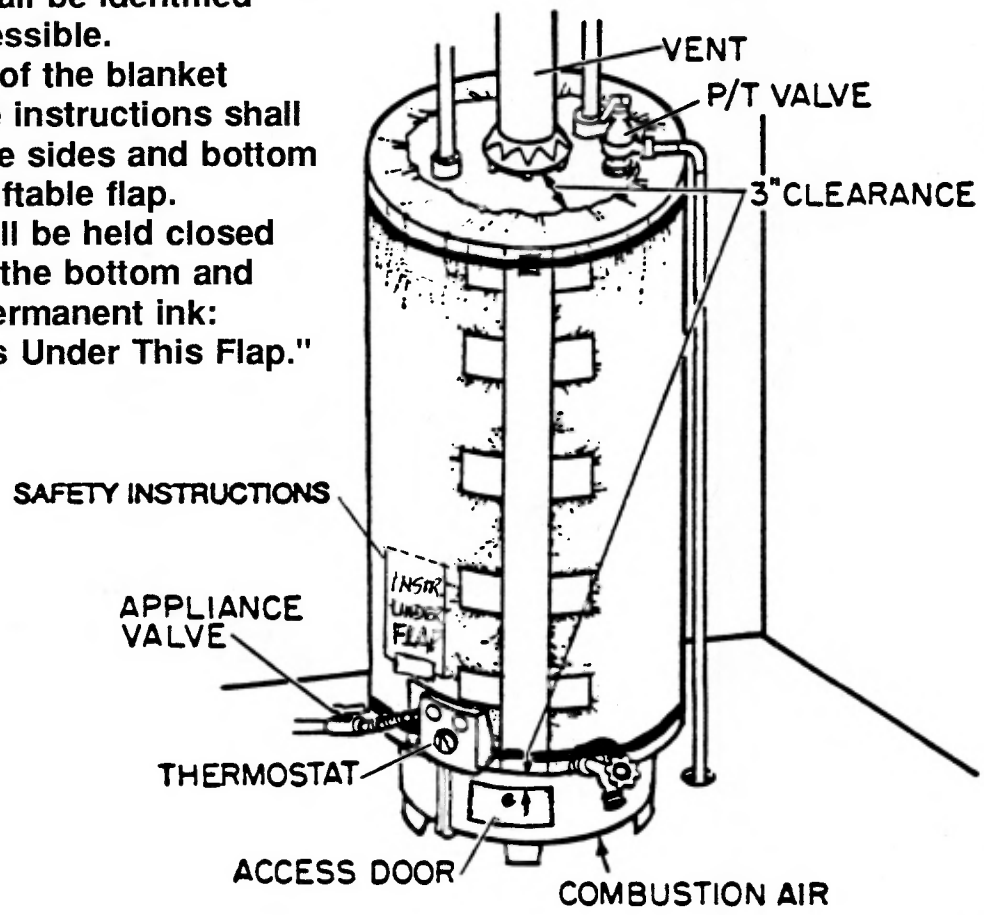

ELECTRIC WATER HEATERS

15. ELECTRIC THERMOSTATS AND LABEL

- Upper and Lower Thermostats
  - Locations shall be identified and easily accessible.
    - Blanket shall be cut on sides and bottom to create a liftable flap over each thermostat cover plate.
    - The flaps shall be held closed with tape at the bottom.
    - The flaps shall be labeled in permanent ink:
      "Thermostat Under This Flap."
  - Blanket straps shall <u>not</u> be placed over a thermostat access flap.
- Identification Label
  - The location shall be:
    - Marked but <u>not</u> cut.
    - Identified with permanent ink: "I.D. Label."

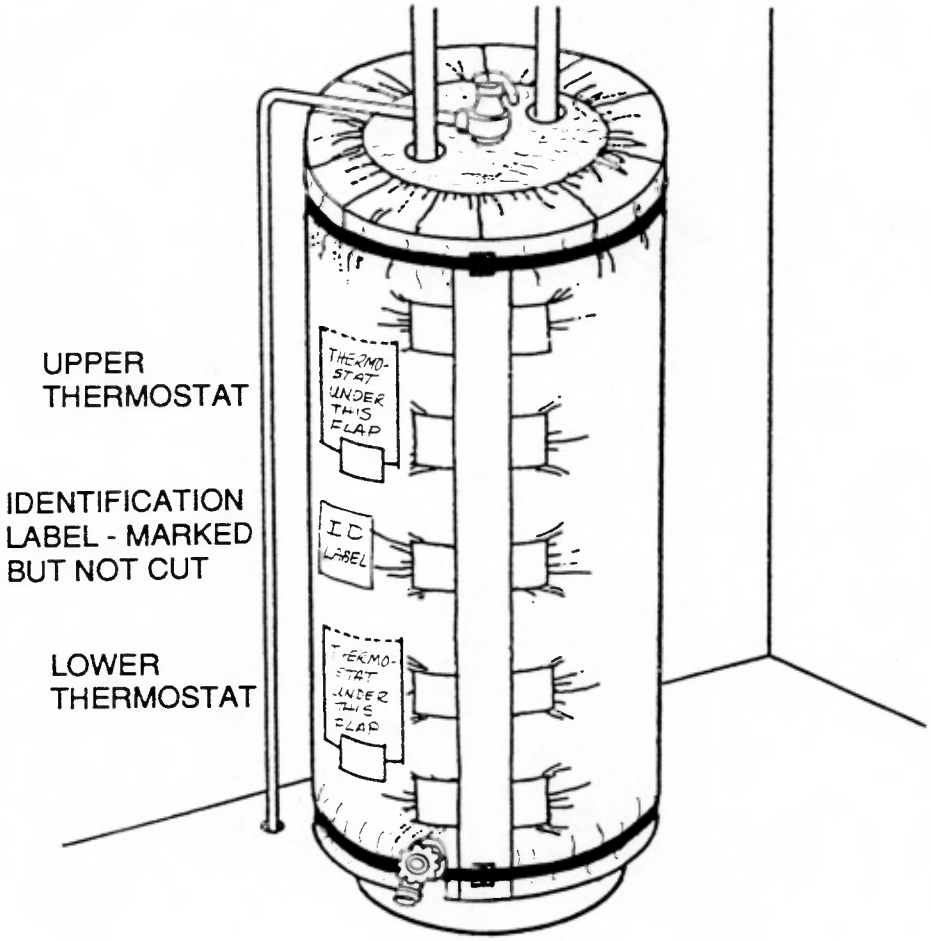

ELECTRIC HEATERS

15. ELECTRIC THERMOSTATS (continued)

- **Temperature Setting**
  - **The maximum temperature shall be 140°F unless a higher setting is required by health code or for medical reasons.**
  - **Thermostats set above 140°F, but not required to be, shall be lowered to 140°F or less with client knowledge and permission.**

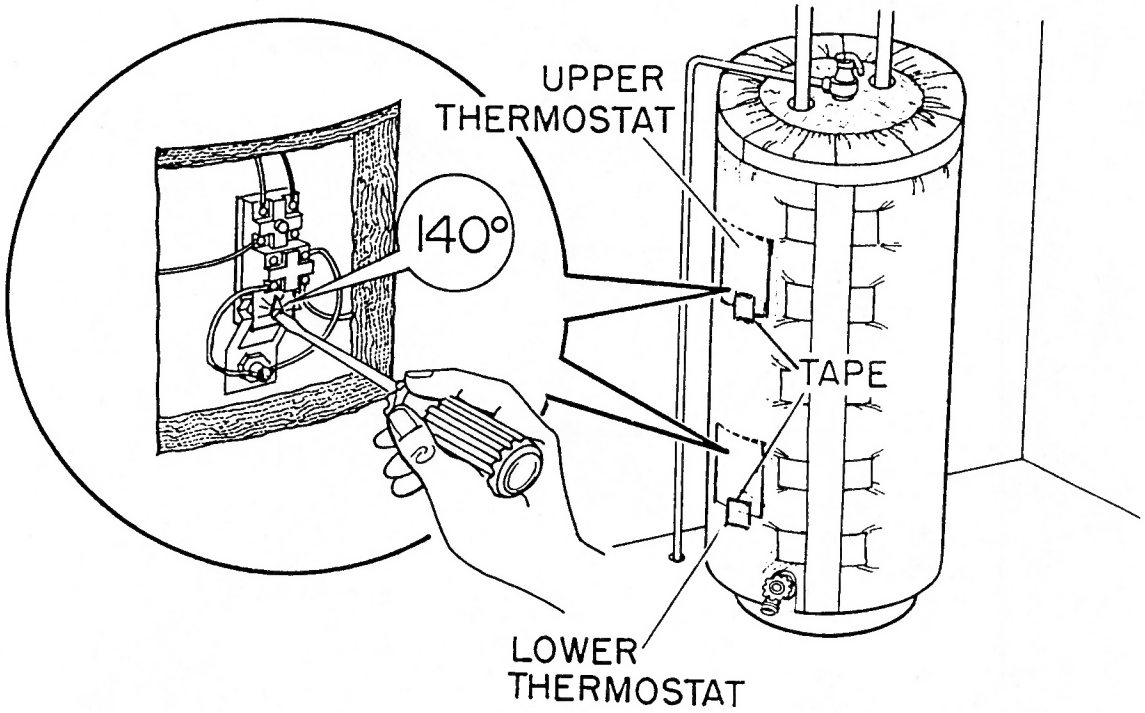

16. UNIT LOCATION

- All Water Heaters
  - Unit shall be located in protected area which is <u>not</u> exposed to the weather.
  - Units located in both conditioned and unconditioned spaces shall be insulated.
- Gas Water Heaters
  - Clearance requirements prior to blanket installation:
    - 1" minimum clearance to wall on sides and back.
    - 6" minimum clearance to door in front.

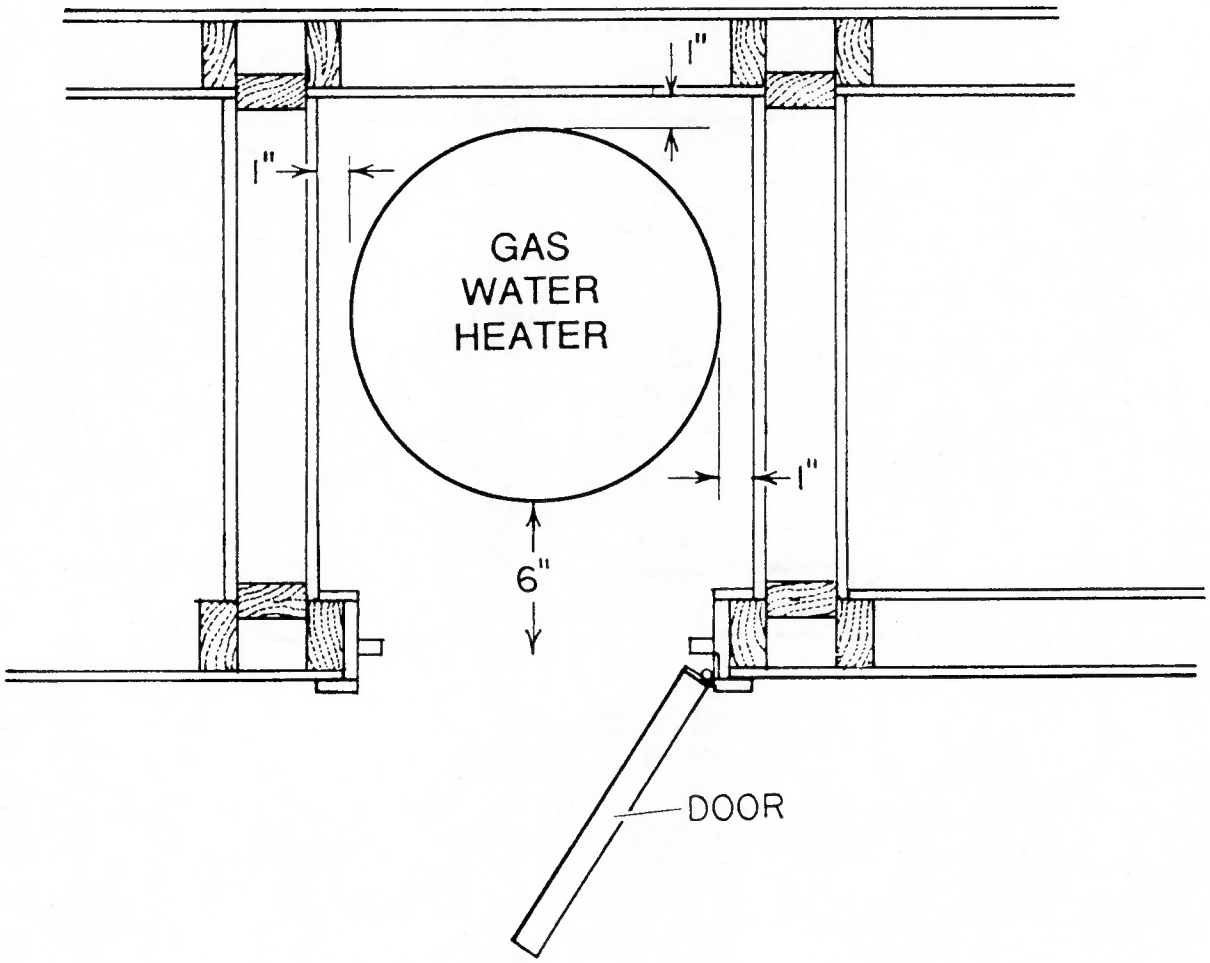

16. **UNIT LOCATION (continued)**
   - **Electric Water Heaters**
     - **Clearance requirements prior to blanket installation:**
       - **1" minimum clearance to wall on sides and back.**
       - **Minimum front clearance is that required to allow door closure without unusual force after the blanket and door insulation, if any, have been installed.**
       - **Door insulation shall be installed in conformance with Item 17.**

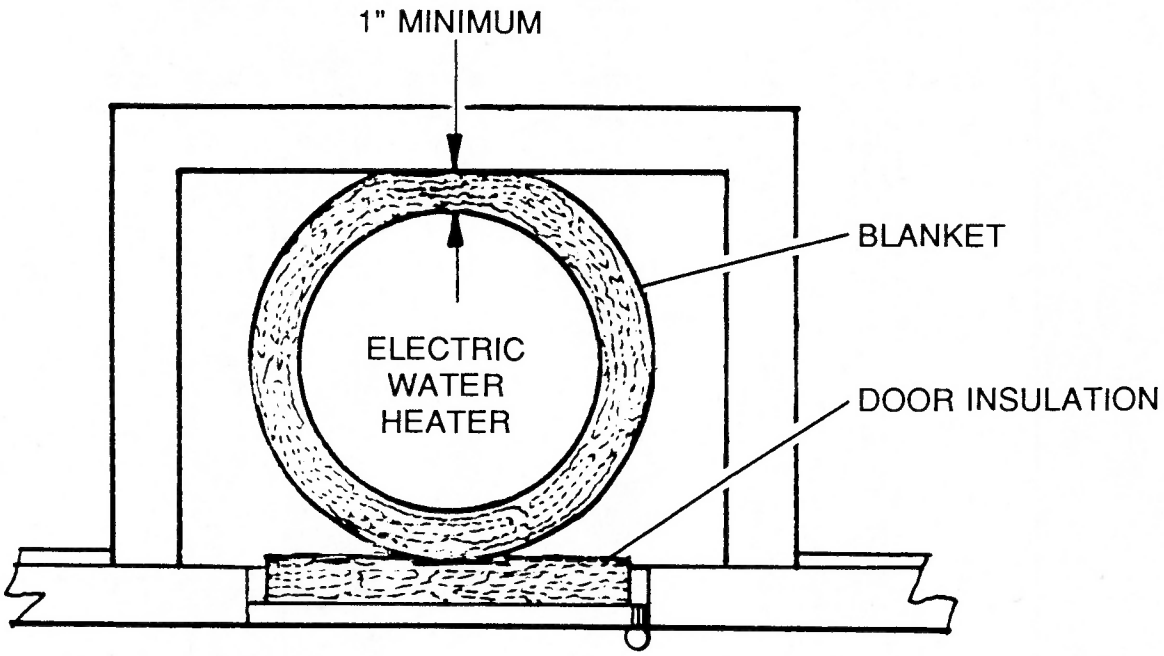

DOOR MUST CLOSE
WITHOUT UNUSUAL FORCE

17. EXTERIOR CLOSET WALL AND DOOR INSULATION

- All Water Heater Closets with Exterior Doors
  - Walls on all closets shall be insulated as feasible if:
    - Closet access is from the exterior only.
    - Closet walls are <u>not</u> internally insulated.
- Electric Water Heater Closets with Exterior Doors
  - Door shall be insulated when space allows.
  - Cracks and holes in the envelope (especially floor) shall be sealed.
  - Door weatherstripping shall be installed, in conformance with Section 5.
- Gas Water Heater Closets with Exterior Doors
  - The closet door and adjacent portions of the exterior wall shall <u>not</u> be insulated.
- Insulation Material
  - Flexible fiberglass.
    - Flame resistant foil faced preferred.
    - Unfaced acceptable.
    - Kraft faced <u>not</u> allowed with fuel burning water heaters.
    - R-11 minimum.
    - Maximum flame spread rating of 25.

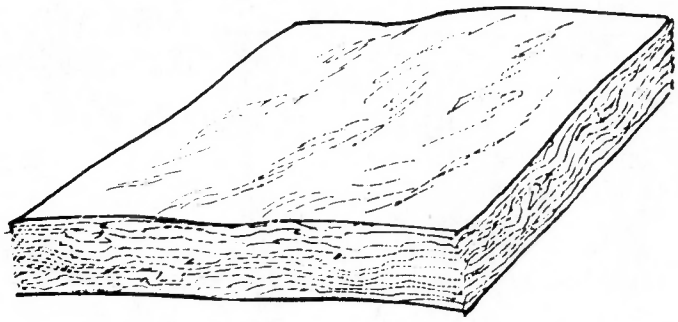

UNFACED OR FOIL FACED FIBERGLASS ALLOWED

KRAFT FACED FIBERGLASS NOT ALLOWED WITH GAS OR OIL UNITS

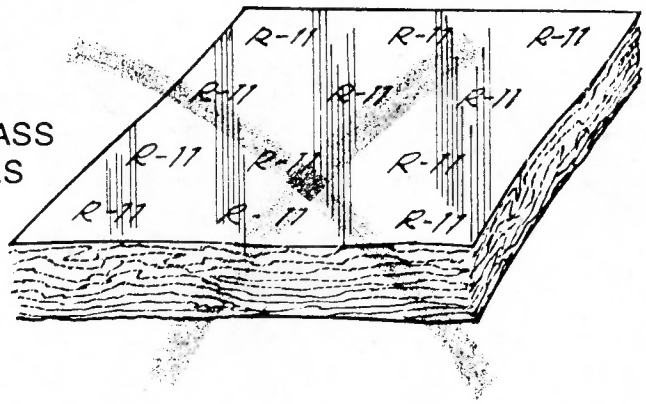

17. EXTERIOR CLOSET WALL AND DOOR INSULATION (continued)

- Attachment
  - When batts with facing are installed, the facing shall be placed against the wall.
  - Batts shall be permanently attached.
  - Wire attachment recommended.
    - Corrosion-resistant, minimum 18 gauge.
  - Staple attachment allowed when faced batts are installed.
  - Maximum 10% compression of insulation by attachments.

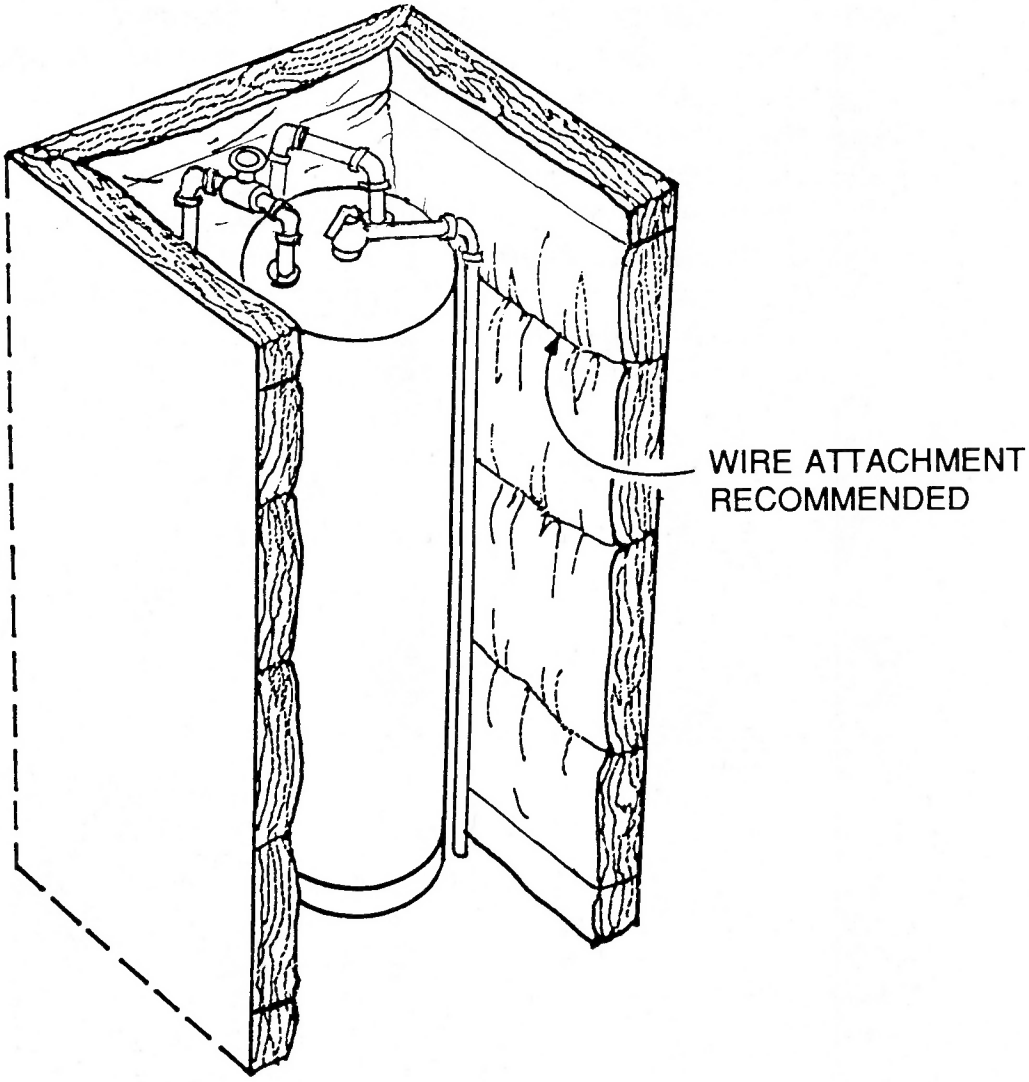

17. EXTERIOR CLOSET WALL AND DOOR INSULATION (continued)

- Material Clearances for Gas Water Heaters
  - After blanket and wall insulation have been installed:
    - No air space is required on sides and back.
    - Minimum 4" clearance is required between front of blanket and closet door.
  - Where space is inadequate for both wall insulation and blanket, blanket installation takes precedence.
- Material Clearances for Electric Water Heaters
  - No air space is required between wall/door insulation and blanket.
  - Where space is inadequate for both wall/door insulation and blanket, blanket installation takes precedence.
  - Closet door shall close without unusual force following installation of insulating measures.

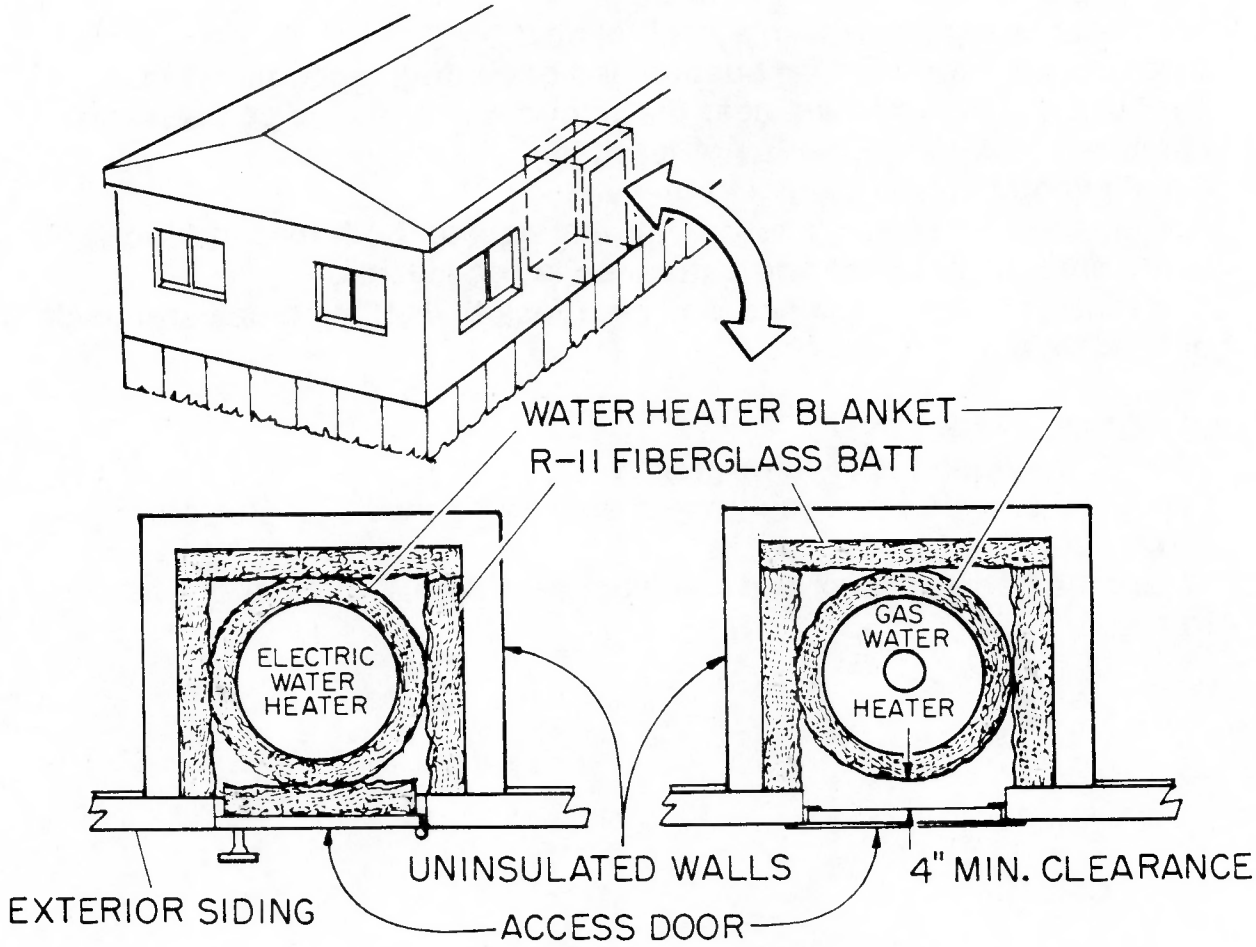

NONFEASIBILITY CRITERIA FOR WATER HEATER INSULATION

All Water Heaters

1. Existing blanket in satisfactory condition.
2. Blanket prohibited by manufacturer.
3. Tank is exposed to weather.
4. Leaking tank or evidence of impending failure.
5. P/T valve not present or not located within 6" of the tank.
6. Tank located within 12" of a gas cook stove.
7. Blanket deemed not cost effective by audit.

Gas Water Heaters

1. Internal insulation is R-12 or greater.
2. Vent pipe and/or draft hood not properly installed and correction is not feasible:
   - No draft hood present.
   - Two draft hoods present.
   - Defective or missing vent pipe.
3. Vent pipe is equipped with a vent damper.
4. Evidence of improper combustion and/or venting (accumulation of soot and/or rust particles near draft hood and/or inside combustion chamber) and correction is not feasible.
5. No appliance valve (gas cock) present.
6. Combustion air supply improper or inadequate (both low and high vents shall be present) and correction is not feasible.
7. Clearance between tank and wall/door less than 1" on sides and back or less than 6" in front.

Electric Water Heaters

1. Internal insulation is R-16 or greater.
2. Presence of exposed wires (frayed or missing insulation) or other electrical hazards.
3. Clearance between tank and wall/door less than 1" on sides, back or front.

SECTION 10

ELECTRICAL OUTLET AND SWITCH GASKETS

PREFACE

The blower door will reveal infiltration at switches and electrical outlets. The individual leaks may seem small, but cumulatively they can account for a significant amount of heat loss and moisture penetration.

Traditionally, gaskets have been installed only on exterior walls, but blower door technology has demonstrated their value on interior walls as well.

Because moisture is often a significant problem in mobile homes, gasket installation is more important in mobiles than it would be in most site-built homes. Moisture, primarily from the bathroom and kitchen, permeates unsealed cracks and holes through the walls and ceiling to collect in the "attic" (roof cavity). There it condenses on the cold roof, runs down to the edge and saturates the perimeter ceiling panels. Thus, it is common to see water stains at the edge of the ceiling in an older mobile home.

Every measure which reduces moisture flow into the roof cavity is beneficial. Gasket installation is a low-cost measure which helps prevent moisture migration while also reducing drafts and heat loss. It is therefore important to put a gasket on every electrical box in both inside and outside walls.

SECTION 10

ELECTRICAL OUTLET AND SWITCH GASKET STANDARDS

1. RECOMMENDED MATERIALS
   - All Gaskets
     - Gasket material shall be:
       - Closed cell foam.
       - Fire resistant
       - At least 1/8" thick.
       - Pre-cut to fit.

2. LOCATION
   - Cover gaskets shall be installed:
     - Under electrical plates only.
     - On interior and exterior walls.

3. WIRING
   - Gaskets shall <u>not</u> be installed in mobile homes equipped with aluminum wiring.

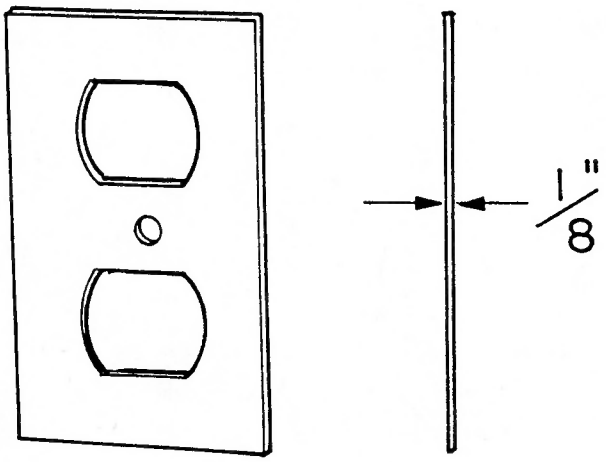

4. PLATES

- **Plates shall cover gaskets completely.**
- **Insulated plates with spring-loaded access covers recommended.**
- **Plates cracked during reinstallation shall be replaced.**

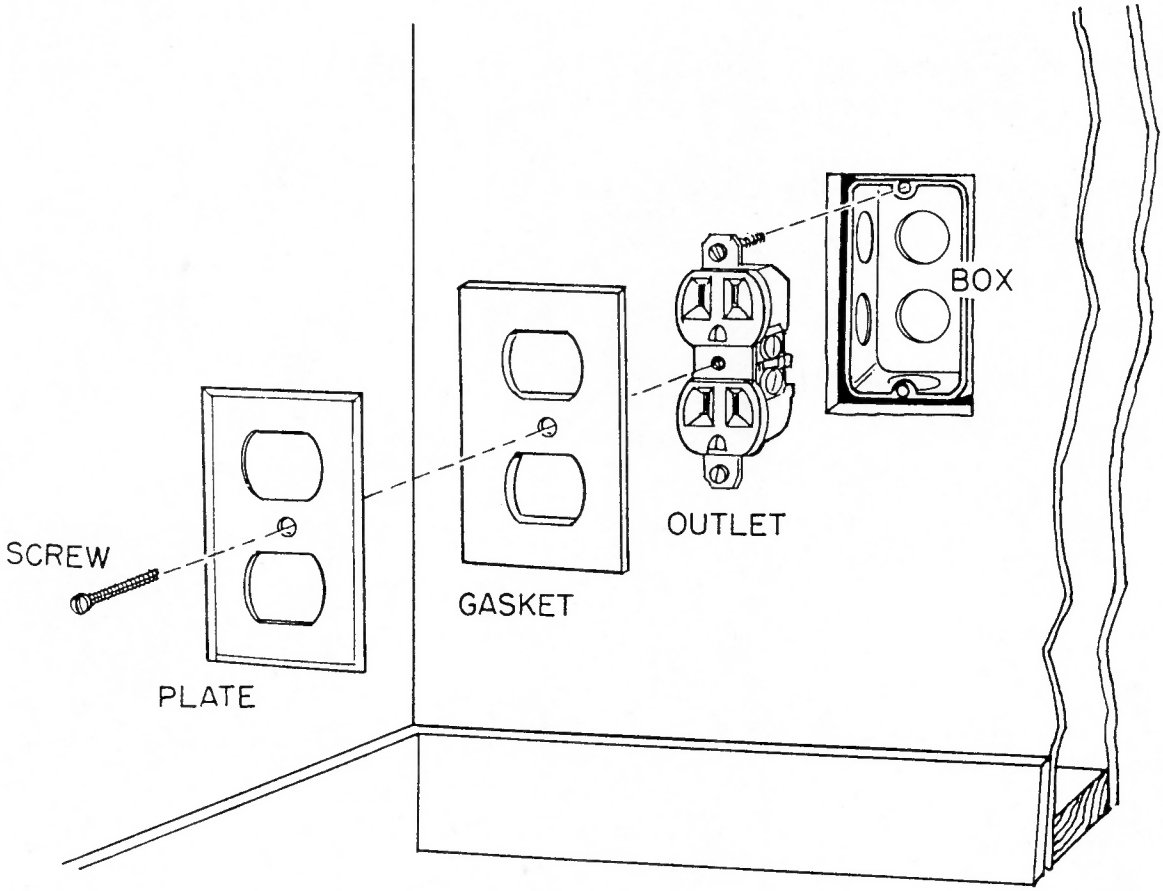

NONFEASIBILITY CRITERIA FOR ELECTRICAL OUTLET AND SWITCH GASKETS

1. Already properly installed.

2. Deemed <u>not</u> cost effective by audit.

3. Minimum ventilation requirement already reached.

4. Outlets and switches located in wall between two unconditioned areas.

5. Outlets and switches located behind fragile furniture, heavy furniture, or major appliances.

6. Evidence of electrical malfunction (i.e., electrical box <u>not</u> permanently attached or signs of burning or charring).

7. Mobile home has aluminum wiring.

SECTION 11

LOW FLOW SHOWERHEADS

PREFACE

Restricting water flow through showerheads to under three gallons per minute is important for both water and energy conservation. A new 2.75 gpm low flow showerhead, for example, can provide substantial energy and cost savings. The exact amount will vary with the flow rate of the existing showerhead and the bathing habits of the users.

A good quality showerhead with a pleasing flow pattern, along with proper consumer education, is crucial for client satisfaction. If the users are not mentally prepared for a reduced water flow and not motivated to properly use a low flow showerhead, they will likely remove the new unit and reinstall an unrestricted one.

Another important concern is the amount of mist created by the showerhead. Because moisture is usually a significant problem, it is best to install only non-aerating showerheads in mobile homes.

SECTION 11

LOW FLOW SHOWERHEAD STANDARDS

1. **RECOMMENDED SHOWERHEAD**
   - **Conformance to ANSI A112.18.1M-1979.**
   - **Must be non-clogging or cleanable without being unscrewed from the neck.**
   - **Must be non-aerating type.**

2. **SHOWERHEAD FLOW RATE**
   - **2.75 gpm maximum flow rate.**
   - **2.0 gpm minimum flow rate at 40 psi house water pressure.**

TO A MAXIMUM OF
2.75 GPM

3. INSTALLATION REQUIREMENTS

- **Functional Showers**
  - **Low flow showerheads shall be installed on all functional showers, including those <u>not</u> currently in use.**
- **Non-functional Showers**
  - **Low flow showerheads shall <u>not</u> be installed on showers which are <u>not</u> functional due to plumbing or physical defects.**
- **Necks**
  - **Necks shall <u>not</u> be removed or replaced.**
  - **Showerheads shall <u>not</u> be installed on plastic necks.**
- **Adapters**
  - **Adapters shall be installed when required to facilitate installation of low flow showerheads.**

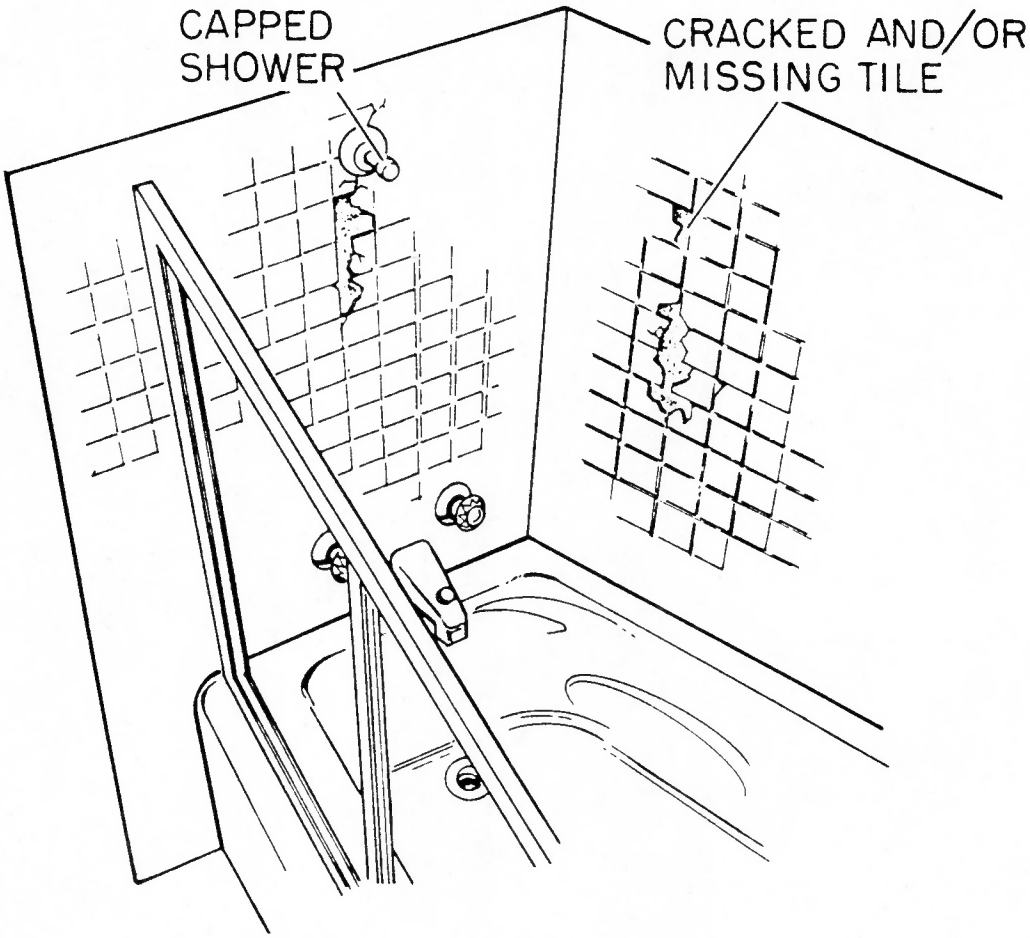

NONFEASIBILITY CRITERIA FOR LOW FLOW SHOWERHEADS

1. Already properly installed.
2. Deemed not cost effective by audit.
3. Existing showerhead required for medical reasons.
4. Existing neck is made of plastic.
5. Neck missing or broken.
6. Standard adapters will not work and provision of the proper adapter is not feasible.
7. Shower is mechanically or physically not functional.

SECTION 12

CEILING/ROOF INSULATION

PREFACE

Adding overhead insulation to a mobile home is often desirable, especially in areas with cold and hot climates. The need is most acute in mobile homes having a metal roof over bowstring trusses with a small air space and little or no insulation between the roof and the ceiling. The blazing summer sun super-heats the roof cavity, and the thin ceiling transfers heat into the living space. During winter, heat is easily lost from the living area through the ceiling to the cold roof cavity and metal roof. Warm moist air also penetrates the ceiling joints and condenses on the roof, often resulting in water damage seen as stains near the edge of the ceiling.

Ceiling/roof insulation will significantly reduce these problems by slowing down the heat flow through the roof cavity. Cavity fill insulation can also help reduce air leakage through the ceiling, thereby improving comfort, cutting utility costs, and reducing moisture condensation problems all at the same time.

A glimpse at the history of mobile homes will help clarify the need for overhead insulation. Mobile homes started becoming popular in the 50's, and double-wides began appearing in the late 60's. There were no comprehensive standards, and insulation was uncommon. In 1971, ANSI minimum insulation standards were adopted, but very little was required and vapor barriers were rarely used. In June of 1976, with mobile home construction under the jurisdiction of the U.S. Department of Housing and Urban Development (HUD), the National Manufactured Home Construction and Safety Standards (MHCSS) went into effect. But that code allowed a minimum of R-8, so even many newer mobile homes are inadequately insulated for areas with very cold and hot climates.

It has been estimated that about half of the approximately ten million mobile homes in America were built prior to 1976, and they are virtually uninsulated. They usually contain only about an inch of fiberglass insulation, if any, and typically no vapor barrier. These units can be identified by other characteristics including jalousie or awning windows, uninsulated doors, 2" x 2" or 2" x 3" wood framing, ventilated walls, uninsulated furnace ducts, tar impregnated fiberboard rodent barrier, or none at all, and absence of a HUD label on the front or rear of the chassis.

These earlier homes typically had curved metal roofs with "bowstring" trusses. Some were virtually flat, with very little air space and no ventilation. The viability of adding ceiling/roof insulation in these units depends upon such factors as these:

1) The height of the trusses must be sufficient to provide enough cavity depth to warrant the addition of insulation by cavity fill. There would be no room, for example, to pump insulation into an old style "flat roof" structure.
2) The strength of the ceiling must be adequate to support the weight of the added insulation as well as the blowing pressure of the insulating machine.
3) The strength of the trusses must be adequate to support the weight of the insulation, whether it be cavity fill or roof cap type.
4) In areas with snow, the roof structure must also be capable of handling the increased snow load that will result from reduced heat loss through the roof.

These factors also apply to post-1976 mobile homes, even though they are required to have a vapor barrier above the ceiling and at least 3 1/2" of insulation (some have as much as R-19). They typically have stronger trusses with greater height, making them more suitable for cavity fill insulation techniques, but the same scrutiny and safety considerations are required.

Two very different methods of retrofitting overhead insulation, cavity fill and roof cap, are addressed in this section along with several applicable material and installation standards. There are pros and cons to both methods, and each mobile home must be evaluated individually.

Three cavity fill techniques are:

Inside Technique: Holes are drilled in the ceiling between trusses, and the cavities are pressure-filled with insulation.

Fill Tube: The metal roof is unscrewed along the perimeter, and a long "fill tube" is inserted to the far side of each cavity and slowly withdrawn as the cavity fills with insulation.

Roof Holes: Holes are cut in the roof at alternate trusses (removing roof vents where present), and insulation is blown into the cavities. However, this is not a recommended method and is not included in this section.

Roof cap insulation, the other method addressed in this section, involves installing rigid insulation over the existing roof and covering it with special interlocking metal sheeting, continuous rolled metal roofing or a continuous synthetic membrane. These roof caps will add thermal

resistance to the roof and can protect against leaks for many years when installed properly.

There are, however, some disadvantages to this method. First, the cost is high and may be prohibitive in many cases. Second, the roof must be capable of withstanding the load. Third, the thermal barrier is placed above the roof cavity air space, making it necessary to seal air vents and other bypasses.

Gable and roof-mount vents can fairly easily be blocked and sealed. However, mobile homes with corrugated metal siding typically have ventilated walls. The corrugations are there to allow air to enter the bottom, rise up and take moisture out of the wall cavities through the openings at the top of the siding. These air paths must not be blocked unless wall insulation is installed. Therefore, bypasses in the top plate, particularly at electrical wire penetrations, would have to be sealed if maximum value of the roof cap insulation is to be realized. Sealing these leaks could entail considerable time and effort, which must be factored into the equation when evaluating cost effectiveness of this method of insulation.

Interior envelope bypasses must be sealed when overhead insulation is installed, especially when the roof cap method is employed. Warm, moist air from the living space that permeates the roof cavity will condense and cause water damage. Thus it may be necessary to caulk ceiling tile joints, electrical fixtures, the marriage line on multi-section units, and other ceiling and wall joints and penetrations.

Building scientists and weatherization technicians have been experimenting for several years with mobile home retrofit insulation methods and materials. Their experiences have helped refine the process and create workable standards. This section reflects the results of those experiences and provides guidance in the practical application of ceiling/roof insulation.

SECTION 12

CEILING/ROOF INSULATION STANDARDS

1. **RECOMMENDED INSTALLATION METHODS**
   - **Roof Cap Insulation System**
     - **Shall be installed <u>only</u> on mobile homes:**
       - **With a ceiling structure <u>not</u> capable of supporting or too shallow to accept a minimum R-11 cavity fill.**
       - **Equipped with a functioning permanent refrigerated air conditioning and/or forced air electric heating system.**
     - **Shall consist of rigid insulating material installed over the existing roof and capped with an overlay of metal roofing or a synthetic membrane.**
     - **Maximum total system weight shall be 1 1/2 lbs/sq. ft.**
     - **Minimum thermal resistance shall be R-11.**

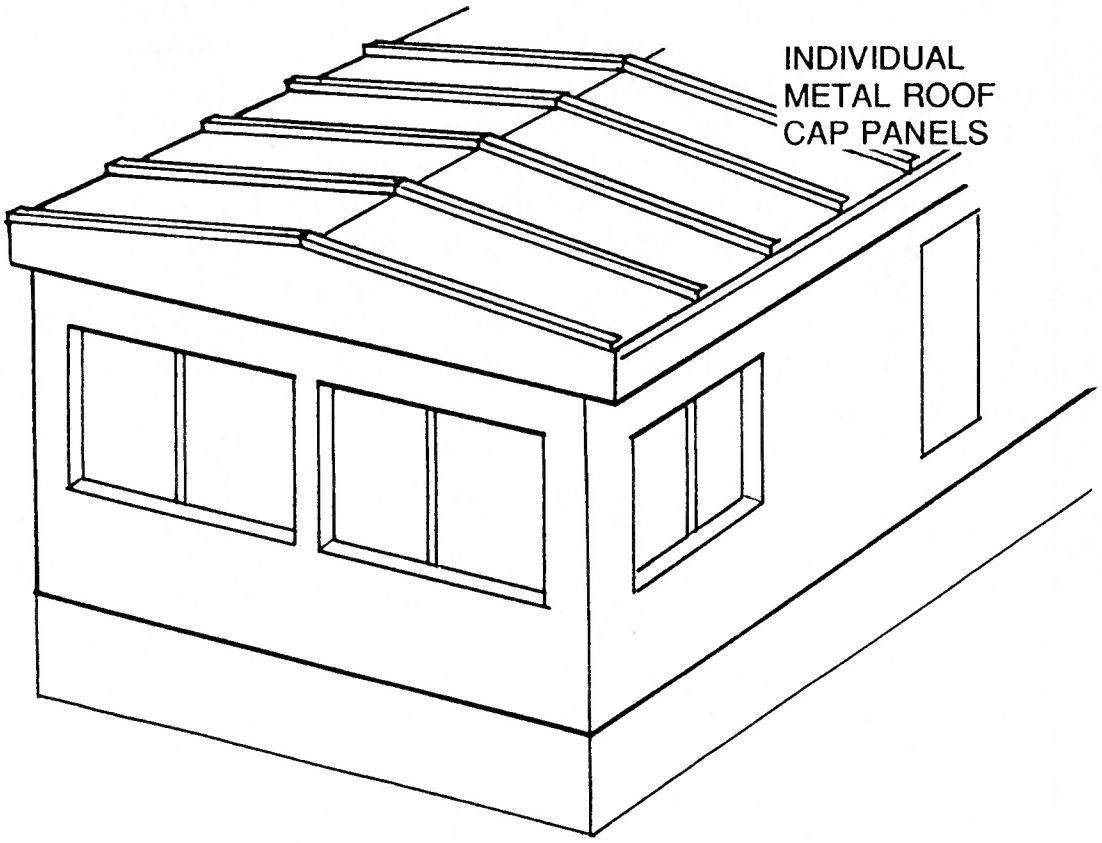

1. RECOMMENDED INSTALLATION METHODS (continued)
   - Interior Ceiling Bore Cavity Fill
     - May be installed in any mobile home with:
       - A ceiling structure capable of supporting the added insulation and blowing pressure.
       - A roof cavity deep enough to accept the required R-Value.
     - R-Value Requirements:
       - Minimum R-11.
       - Average R-19.
       - Maximum R-30.
   - Exterior Roof Edge Cavity Fill
     - Shall be installed <u>only</u> in a mobile home with a metal roof.
     - All requirements listed above for "Interior Ceiling Bore Cavity Fill" also apply to this method.

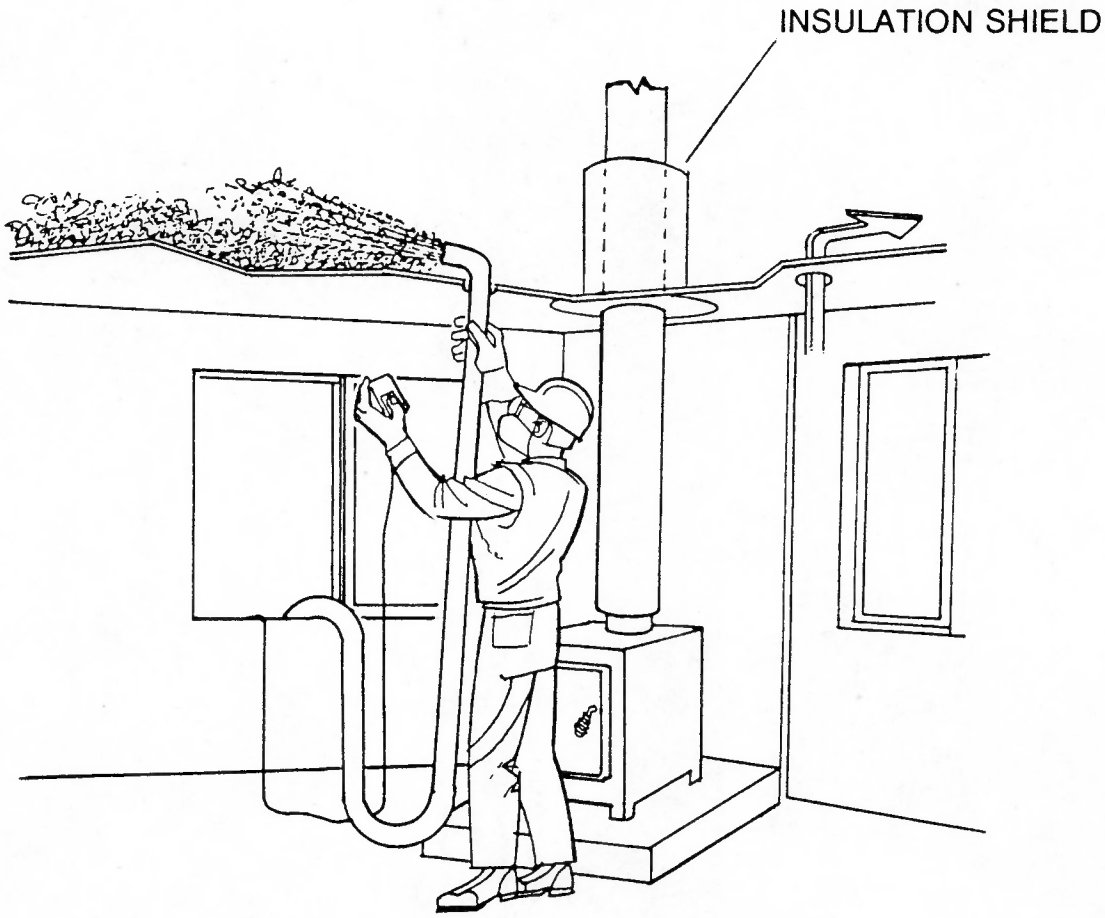

2. INSTALLATION METHOD RESTRICTIONS

- Gable End Cross-Blow Cavity Fill
  - Shall not be used to insulate the entire roof cavity.
  - May be used to fill the area immediately adjacent to gable ends, subject to the following restrictions:
    - When an access hole is available for installation and visual inspection, insulation shall be blown only within an area where proper distribution can be verified by visual inspection.
    - When holes are drilled for nozzle fill:
      - Minimum 2" diameter holes are required.
      - Holes shall be spaced so that insulation is not required to travel more than 2' laterally or 1' vertically upward.
      - A directional nozzle or curved fill tube shall be used to inject the insulation.
      - Loose fill fiberglass shall be used.
- Metal Roof Access Restrictions
  - Any metal roofing roll-back, cutting, boring, or penetrating is prohibited.

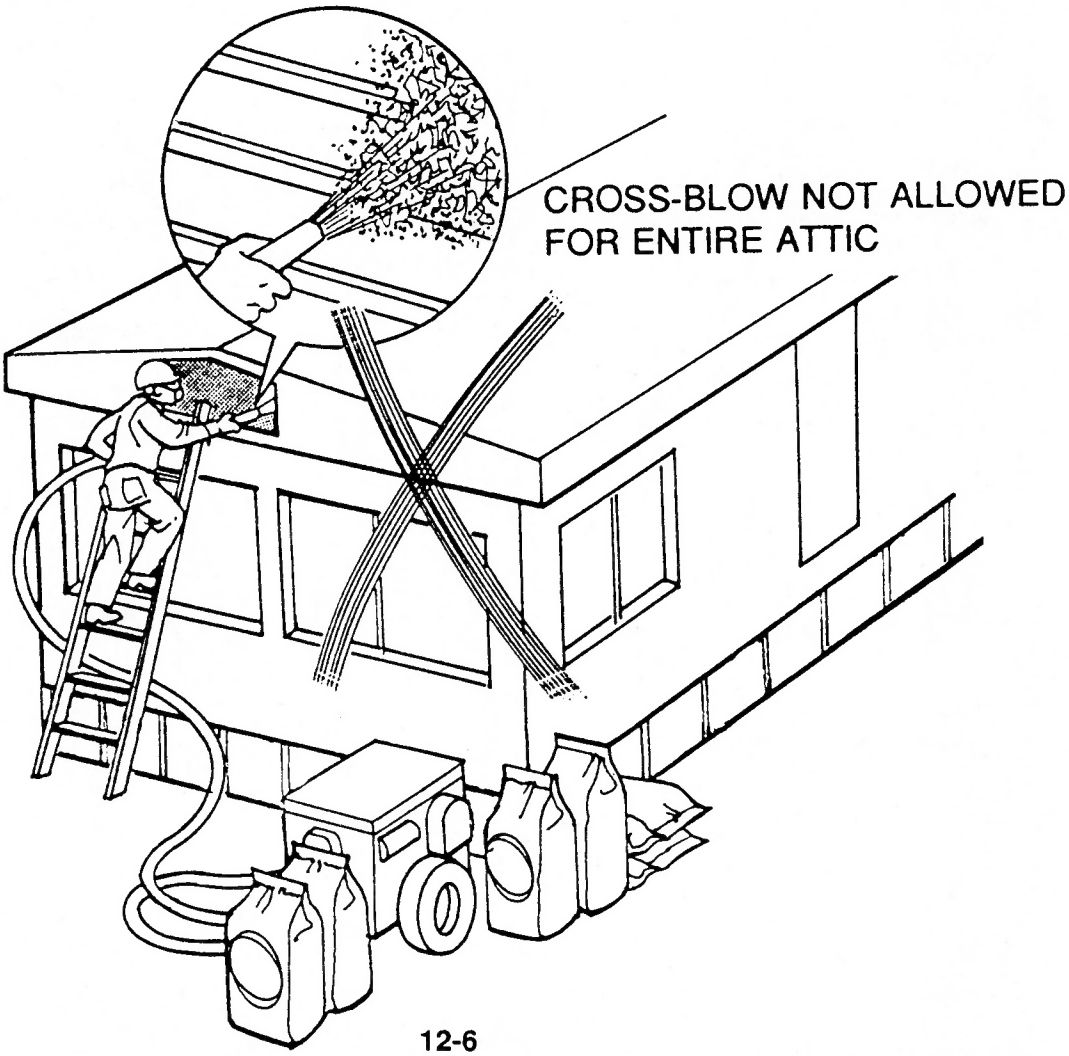

3. RECOMMENDED INSULATION MATERIALS

- Mineral Fiber
  - Flexible
    - Conformance to ASTM C665-88.
  - Roof Board High Density Fiberglass
    - Conformance to ASTM C726-88.
    - Minimum density 3 lbs/cu.ft.
  - Loose Fill Fiberglass
    - Conformance to ASTM C764-88.
  - Loose Fill Rock Wool
    - Not allowed.
- Rigid Foam Board
  - Preformed Expanded Polystyrene.
    - Conformance to ASTM C578-87a.
    - Minimum density 1 lb/cu.ft.
  - Preformed Foil Faced Polyisocyanurate or Polyurethane
    - Conformance to FS HH -1-1972/1 (1981).
- Cellulose
  - Loose Fill Cellulose
    - Not allowed.

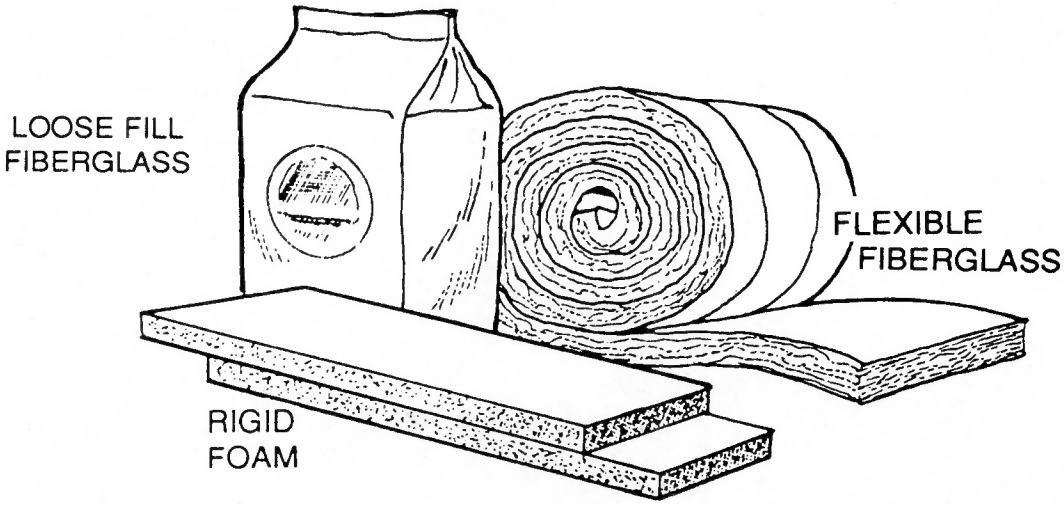

4. STRUCTURAL REQUIREMENTS
- All Insulation Methods
  - Trusses shall be capable of withstanding:
    - The added weight of the insulation system.
    - The increased snow load resulting from reduced heat loss through the roof.
  - Ceiling condition shall be such that all holes, cracks, and other bypasses into the roof cavity can be effectively repaired and sealed to minimize permeation of household moisture into the roof cavity.
- Cavity Fill Method
  - Ceiling shall be structurally adequate to support the weight of the added insulation plus the blowing machine pressure without bulging or sagging.
    - Maximum ceiling panel deflection after cavity fill shall be 1/4" in 4' of lateral run.

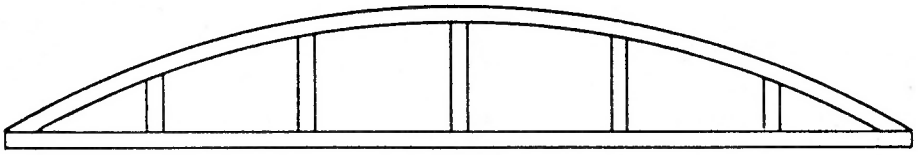

BOW STRING TRUSS

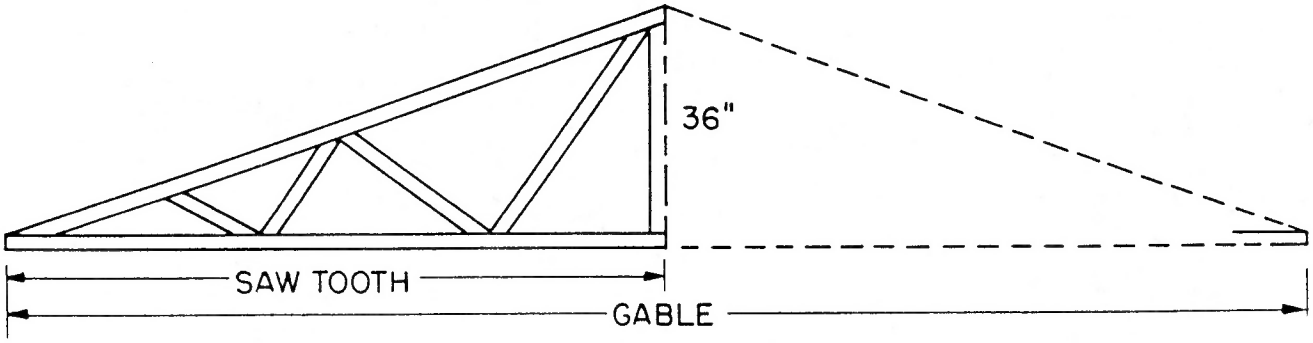

5. PRE-INSTALLATION INSPECTION

- All Mobile Homes
  - Roof cavity shall be inspected to determine:
    - The amount of pre-existing insulation.
    - If minimum R-11 can feasibly be added.
    - If a vapor barrier is present.
  - Existing vent screens, access covers, light fixtures, etc., shall be removed as needed to perform the inspection.
  - When no better means of access is available, an inspection hole may be cut in the ceiling.
    - Hole shall be located out of sight in a cupboard or closet.
    - Minimum recommended hole diameter 2".
    - Care shall be exercised to <u>not</u> pull, tear, or otherwise damage the vapor barrier with the hole saw.
    - Hole shall be plugged or patched and sealed.

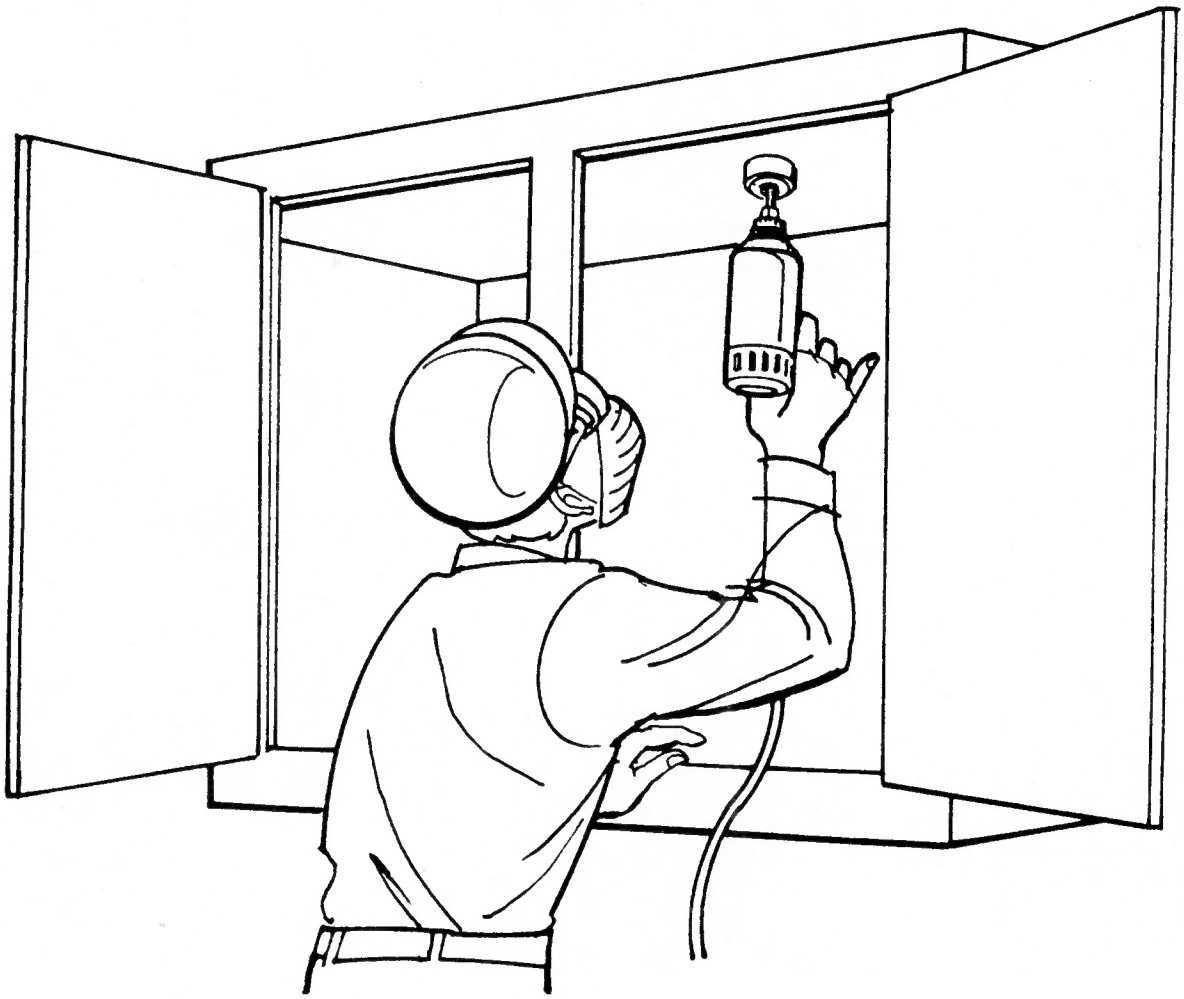

6. INTERIOR PREPARATION

- All Insulation Methods
  - Blower door analysis and repair as prescribed in Section 2 shall be performed prior to installation of any insulation system.
    - Envelope sealing is required, with particular attention to wall and ceiling bypasses.
    - All leaks which can allow household moisture to penetrate the walls or ceiling and permeate the roof cavity shall be sealed.
- Cavity-Fill Systems
  - Ceiling panel attachments
    - Existing attachments shall be tight and secure.
    - Additional attachments shall be installed as needed to prevent excessive ceiling sag.
  - Ceiling panel repair
    - Weak, deteriorated, or broken ceiling panels anywhere in the area to be insulated shall be repaired, as needed, to prevent ceiling panel collapse or excessive sag.
    - Repairs in open, visible areas shall be made in an aesthetically pleasing manner.

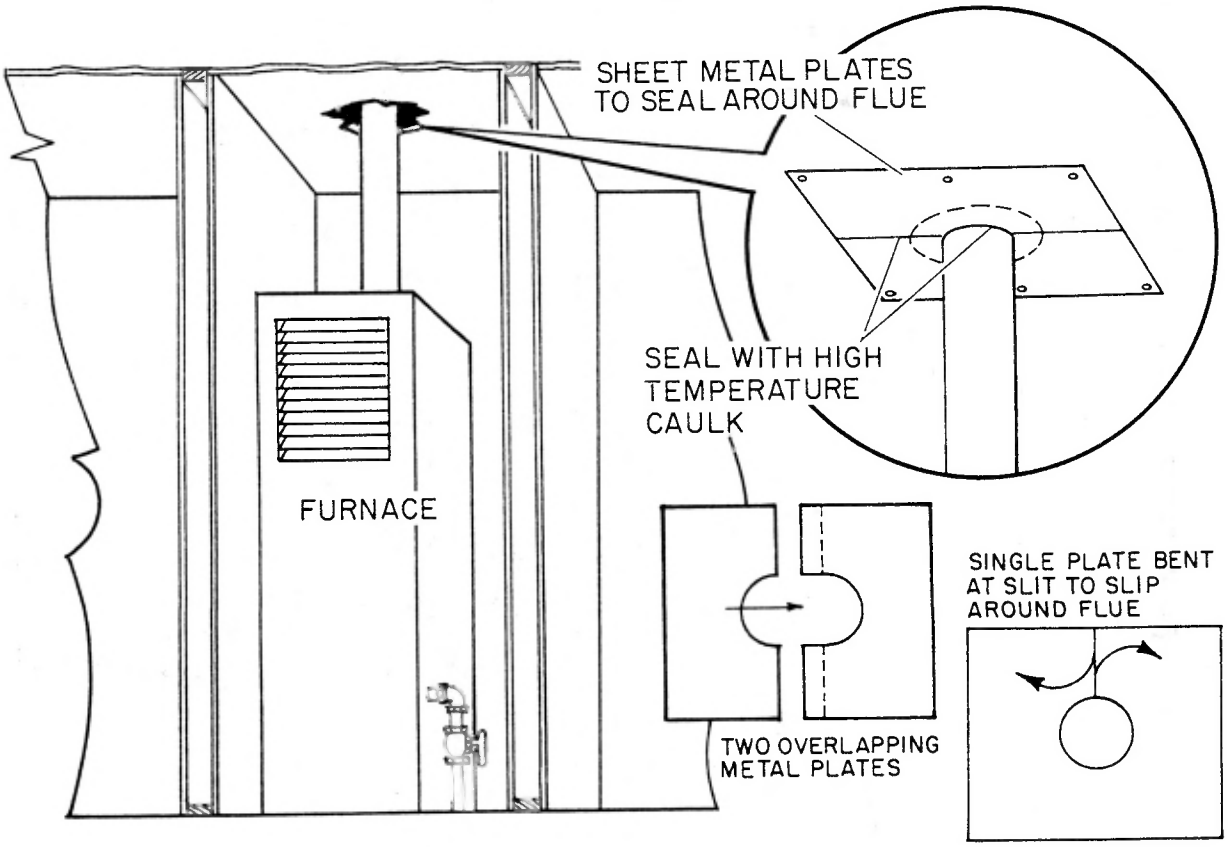

7. ROOF LEAKS
- Roof Cap System
  - Leaks in the existing roof shall be sealed prior to installation of roof cap.
  - Roof cap system shall meet the warranty requirements stated in Item 8-L.
- Ceiling Cavity Fill
  - All roof leaks shall be repaired prior to installation of insulation.
    - All repairs shall be made in a manner which assures a watertight seal with a minimum life expectancy of 15 years.
    - Defective roof-mount flashing devices shall be replaced.
    - All cracks and gaps 1/16" or larger shall be repaired with such materials as:
      - Self-adhering flexible sheet roof repair material.
      - Roof repair compound in combination with roof repair fiberglass mesh.
    - Cracks under 1/16" wide may be sealed without fiber reinforcement using an elastomeric sealant or roof repair compound which is compatible with the existing roof surface.
    - All surfaces shall be cleaned and materials shall be applied in conformance with manufacturer's instructions.

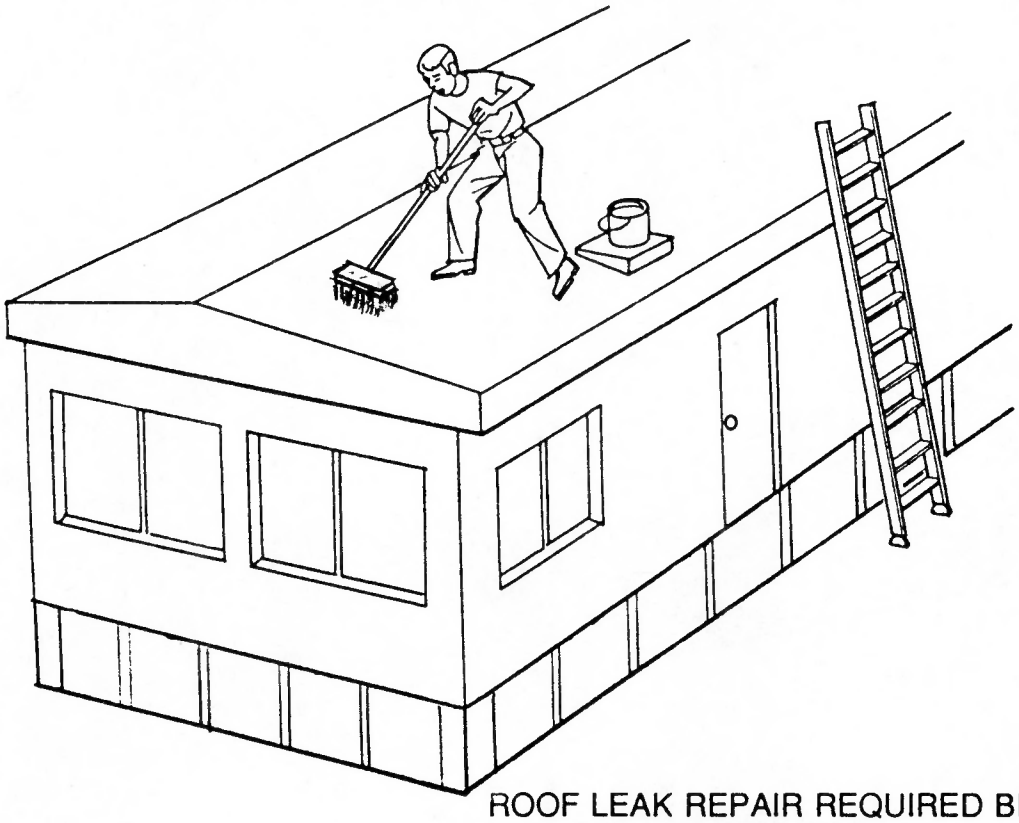

ROOF LEAK REPAIR REQUIRED BEFORE INSULATION IS INSTALLED

8. ROOF CAP INSULATION SYSTEMS

A. SYSTEM DESIGN

- All Systems
  - System design shall be submitted to and approved by the authority having jurisdiction over mobile home alteraltions.

B. INSULATING MATERIAL

- Recommended Materials
  - Rigid Foam
    - Preformed Expanded Polystyrene
    - Preformed Polyisocyanurate
  - Roof Board
    - High Density Fiberglass
- All Materials
  - Shall conform to requirements specified in Item 3.

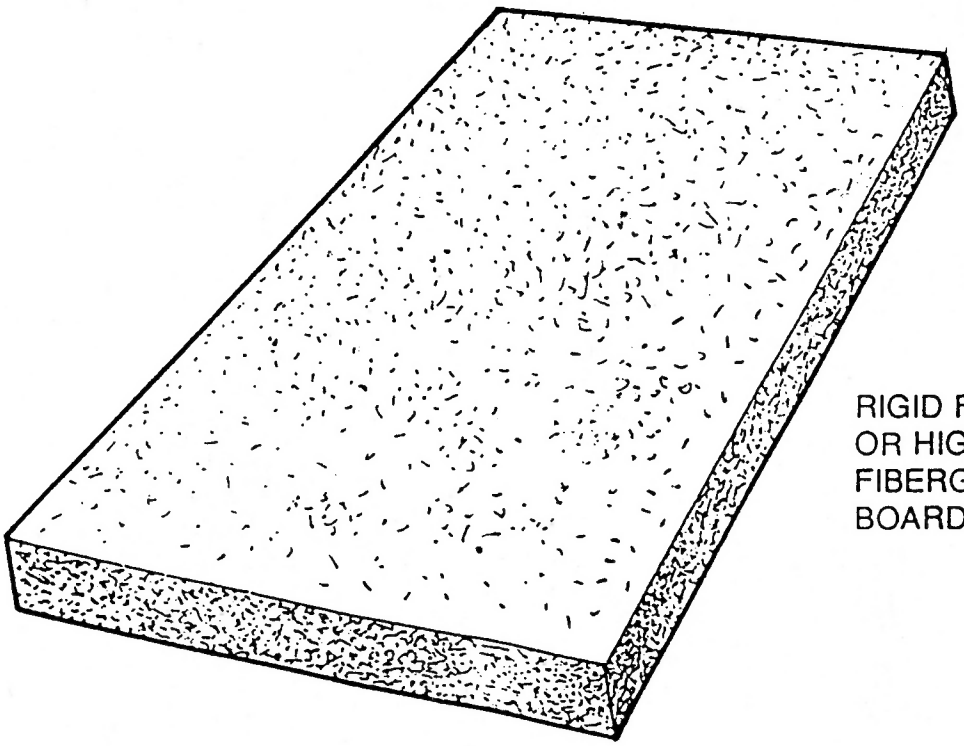

RIGID FOAM
OR HIGH DENSITY
FIBERGLASS ROOF
BOARD

8. ROOF CAP INSULATION SYSTEMS (continued)

C. ROOF COVER MATERIALS

- All Roof Cap Systems
  - Cover material shall be:
    - HUD approved and listed.
    - Approved by the manufacturer for mobile home roof cap application.
    - Adequately puncture resistant to withstand the environmental hazards of the location in which it will be installed, e.g. dropping pine cones, tree branches, etc.
    - Light in color.
- Metal Roof Cap Systems
  - Continuous roll-on roofing with factory-sealed seams is:
    - Required on curved roof.
    - Recommended on all roofs.
  - Individually installed panels:
    - Shall <u>not</u> be applied to curved roof surfaces.
    - Shall have interlocking standing seams which permanently seal against water penetration.
- Steel Roofing Material
  - Minimum thickness: 30 gauge.
  - Galvanized steel required.
  - Baked-on enamel or equivalent coating recommended.
  - Shall conform to ASTM A361/361M-85.
- Aluminum Roofing Material
  - Minimum thickness: .024".
  - Baked-on enamel or equivalent coating recommended.

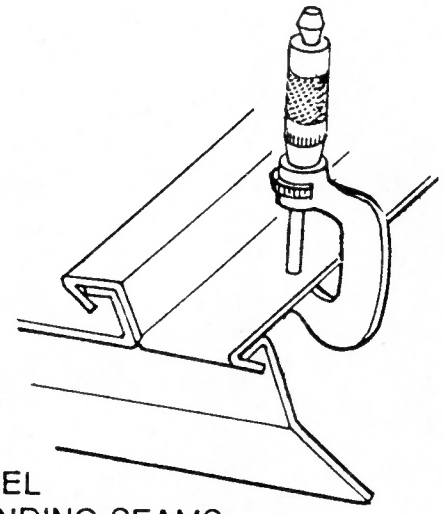

MINIMUM METAL THICKNESSES - FLAT AND ROLLED

GALVANIZED STEEL 30 GAUGE

ALUMINUM .024"

INDIVIDUAL PANEL WITH STANDING SEAMS

8. ROOF CAP INSULATION SYSTEMS (continued)

C. ROOF COVER MATERIALS (continued)

- Synthetic Membranes
  - Splicing Restrictions
    - Membranes which are spliced and attached with a permanent vulcanizing process may be installed in strips and sealed along the lengthwise seams on site.
      - Strip length shall equal the roof length.
      - Strip width shall be a minimum of 6'.
    - Membranes which are spliced and attached with glue and/or mechanical attachments shall be supplied full size with factory-sealed seams.
      - On-site seam sealing is <u>not</u> allowed.
      - A single membrane shall cover:
        - An entire single-wide roof.
        - The entire roof of each section of a multi-section mobile home.
  - PVC Material
    - Minimum thickness: 40 mil.
    - Imbedded rip-stop fiber scrim required.
  - EPDM and Hypalon^{tm} Rubber
    - Minimum thickness: 45 mil.
    - Material shall conform to ASTM D4637.
  - Other Materials
    - Shall be approved prior to installation.

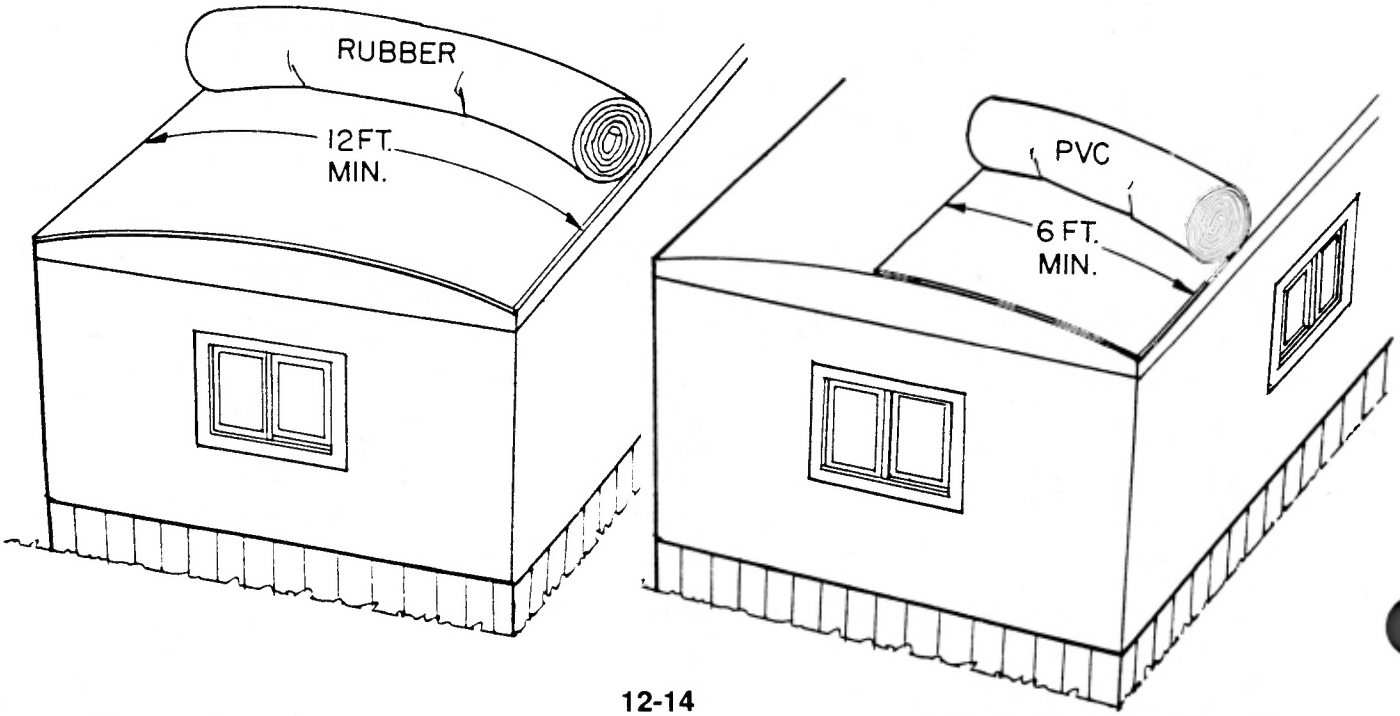

8. ROOF CAP INSULATION SYSTEMS (continued)

D. OTHER SYSTEM COMPONENTS

- Wood Edging and Furring
  - Grade, type, and size
    - #2 or better Douglas Fir acceptable.
    - Redwood or pressure-treated fir preferred.
    - Nominal 2" x 2" minimum cross sectional dimensions.
  - Thickness
    - Height of wood shall equal height of insulation ± 3/8".

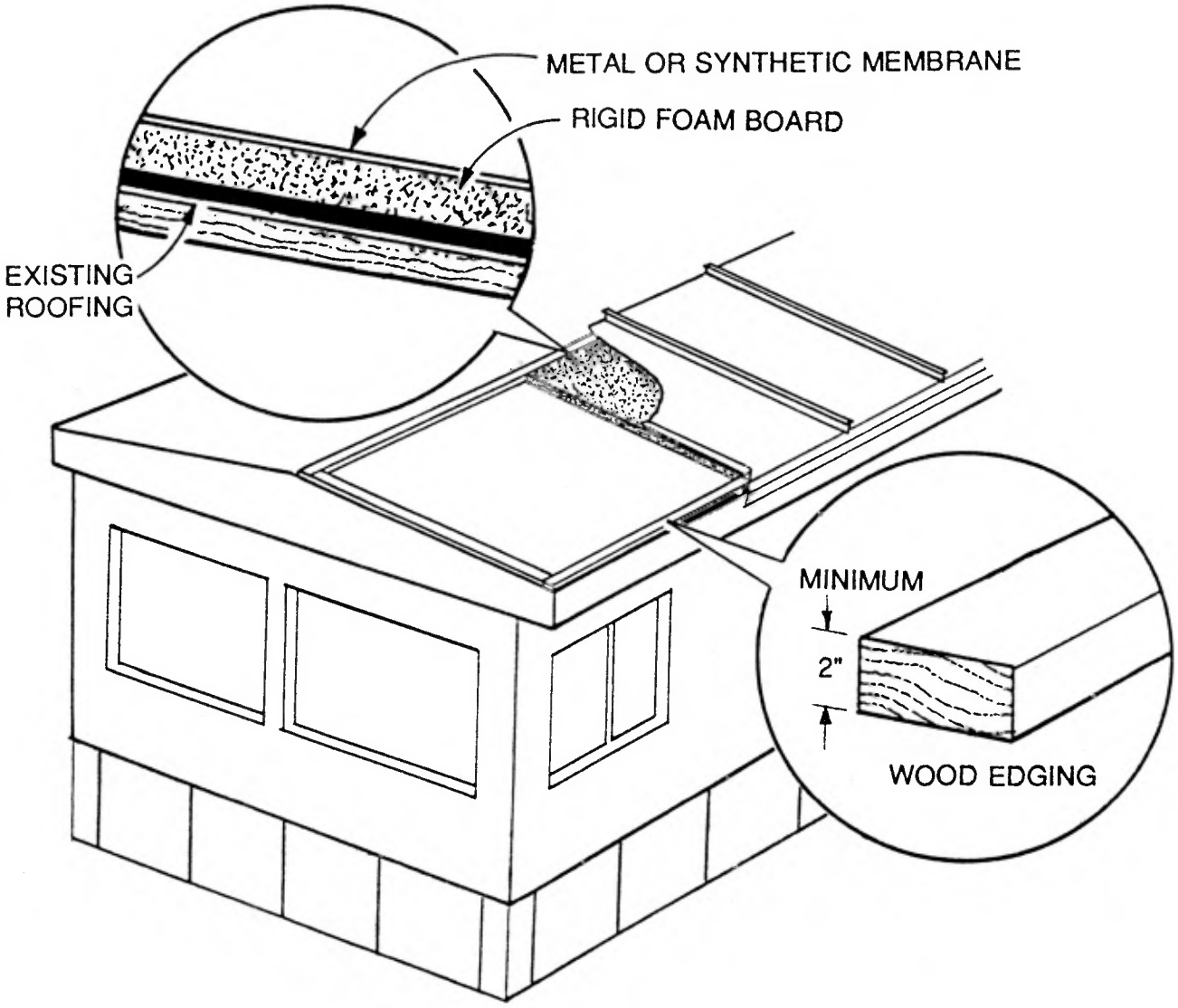

8. ROOF CAP INSULATION SYSTEMS (continued)

D. OTHER SYSTEM COMPONENTS (continued)

- All Metal Components
  - Shall be manufactured for the application in which they are used.
  - Shall meet the thickness requirements listed below unless lighter weight material is approved by the State Plan Check Engineer.
  - Shall be installed, secured, and sealed in conformance with manufacturer's instructions.
- Metal Edging Without Wooden Perimeter
  - Minimum thickness
    - Aluminum: .028".
    - Galvanized steel: 26 gauge.
- Metal Drip Rails, Edge Trim and Flashing, End and Ridge Caps
  - Minimum thickness
    - Aluminum: .024".
    - Galvanized steel: 30 gauge.

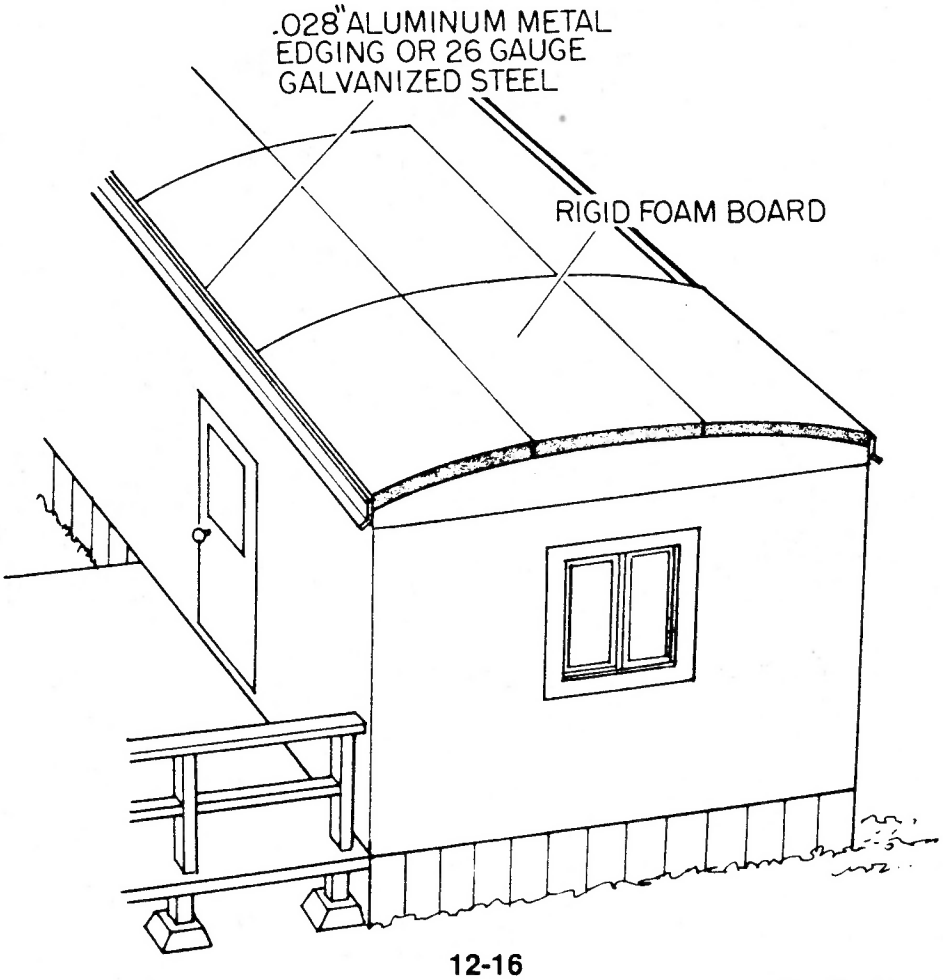

8. ROOF CAP INSULATION SYSTEMS (continued)

E. COMPONENT ATTACHMENT

- All Components
  - The attachment requirements prescribed herein shall apply unless superseded by manufacturer's instructions or applicable codes.
- Wood Edging and Furring
  - Method of attachment
    - Screws shall be used to attach wood members to the framework of the existing roof.
    - Screws shall penetrate the wood framework 3/4" minimum.
    - Screw heads shall be flush or countersunk.
  - Screws
    - All screws shall be:
      - #8 minimum size.
      - Flathead.
      - Noncorrosive.
  - Screw placement
    - A minimum of one screw shall be:
      - Installed within 4" of the ends of each piece.
      - Penetrate each underlying truss.

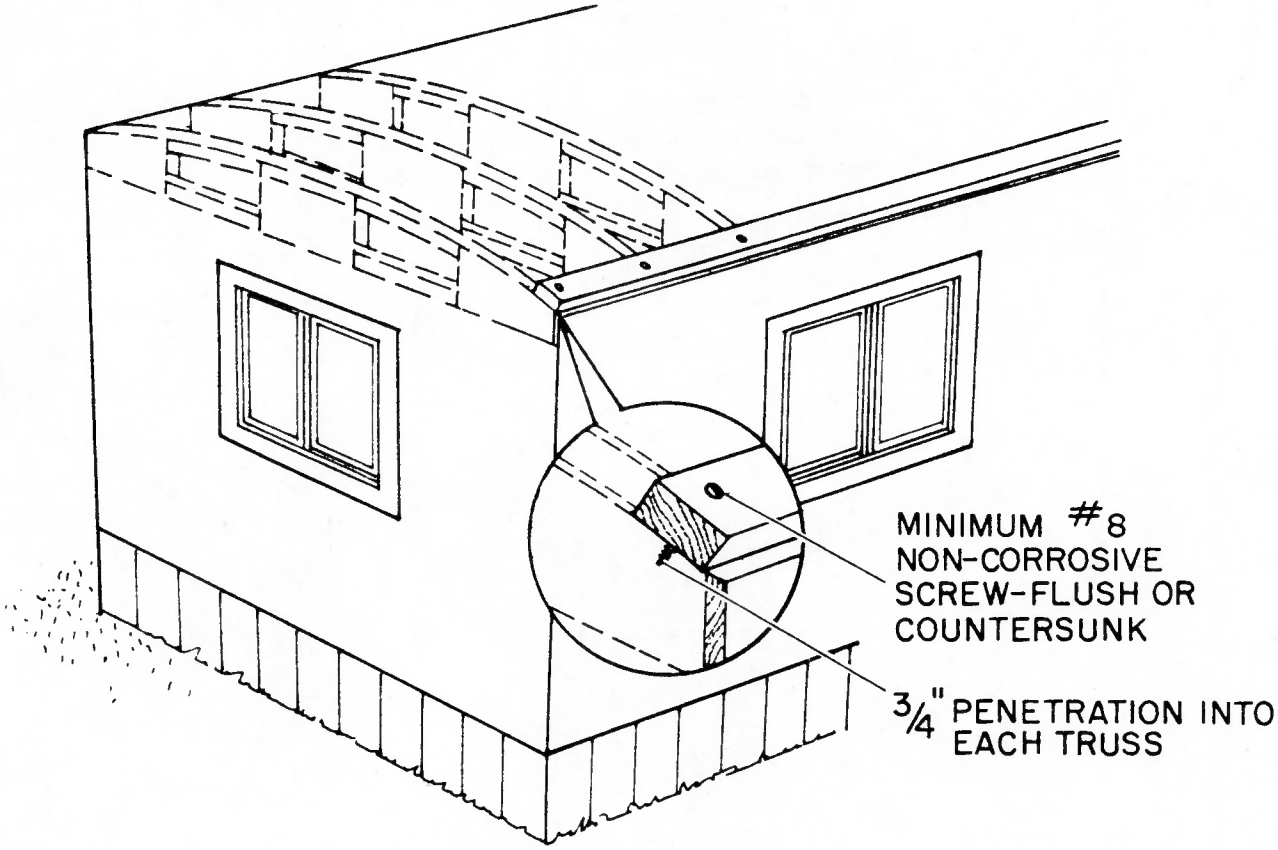

8. ROOF CAP INSULATION SYSTEMS (continued)

E. ATTACHMENT (continued)

- Metal Edging, Drip Rail, Ridge Cap, and Similar Components
  - Method of attachment
    - Metal components shall be securely attached to the mobile home framework with screws.
    - All screws shall penetrate wood when attaching roof edging and drip rails.
    - Screws entering wood shall penetrate 3/4" minimum.
    - Screws shall be spaced a maximum of 4" OC.
  - Screws
    - All screws shall be:
      - #8 minimum size.
      - Noncorrosive: cadmium plated or equivalent.
      - Proper type and size to assure a permanent attachment.
  - Sealing
    - As prescribed in Item 8-F.

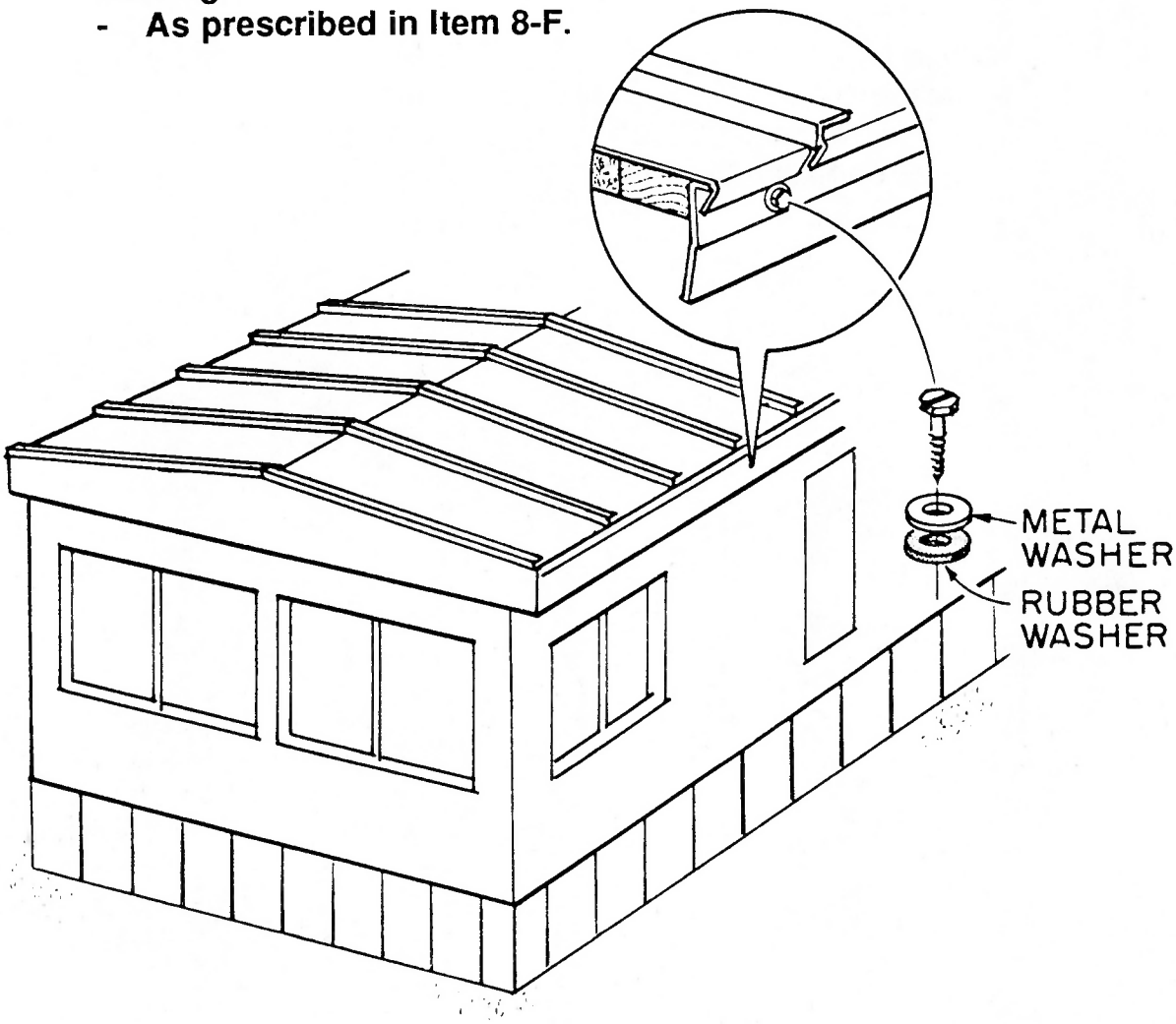

8. ROOF CAP INSULATION SYSTEMS (continued)

E. ATTACHMENT (continued)

- Rigid Insulation Materials
  - Attachment Components
    - Insulating panels shall be secured to the metal roof with screws and washers.
    - Screws shall be #8 or larger and noncorrosive.
    - Washers shall be 3" minimum diameter and shall contain a center recess to place the screw head flush with or below the surface of the insulation.
  - Screws placement
    - Screws shall be:
      - Placed within 6" of each corner.
      - Spaced elsewhere a maximum of 4' OC.

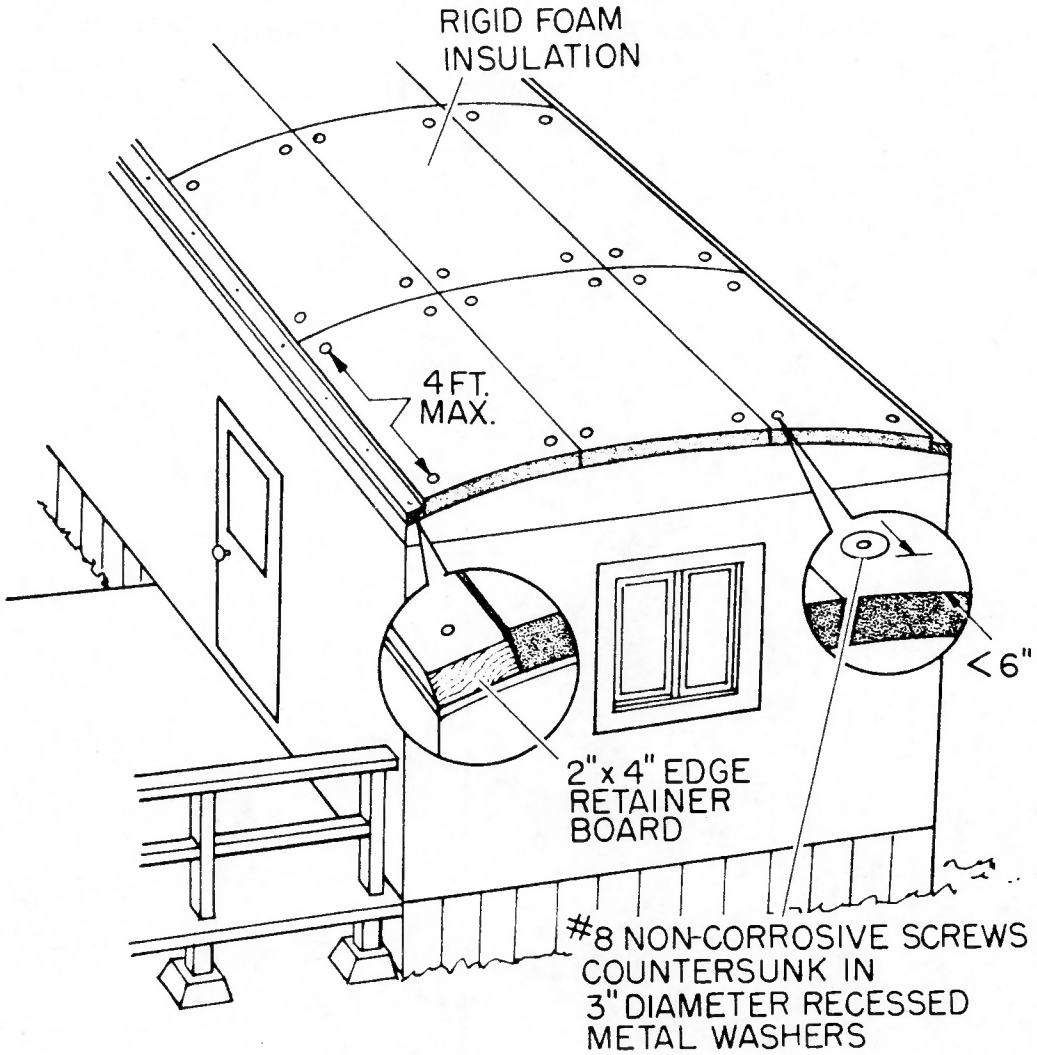

8. ROOF CAP INSULATION SYSTEMS (continued)

F. COMPONENT SEALING

- Metal Roof Edging, Drip Rails, and Other Water Barrier Components
  - Elastomeric sealant or putty tape a minimum of 1/8" thick shall be placed between the component and the mounting surface in any location where water could penetrate.
  - Noncorrosive screws shall be used to secure the component and compress the sealant.
  - All penetration points shall be made watertight.
    - Exposed screws shall be sealed with one of the following:
      - Tight-fitting rubberized metal washers.
      - Tight-fitting pliable water-sealing washers backed by noncorrosive metal washers.
    - Additional sealing with elastomeric sealant shall be provided, as needed, to assure a watertight system.

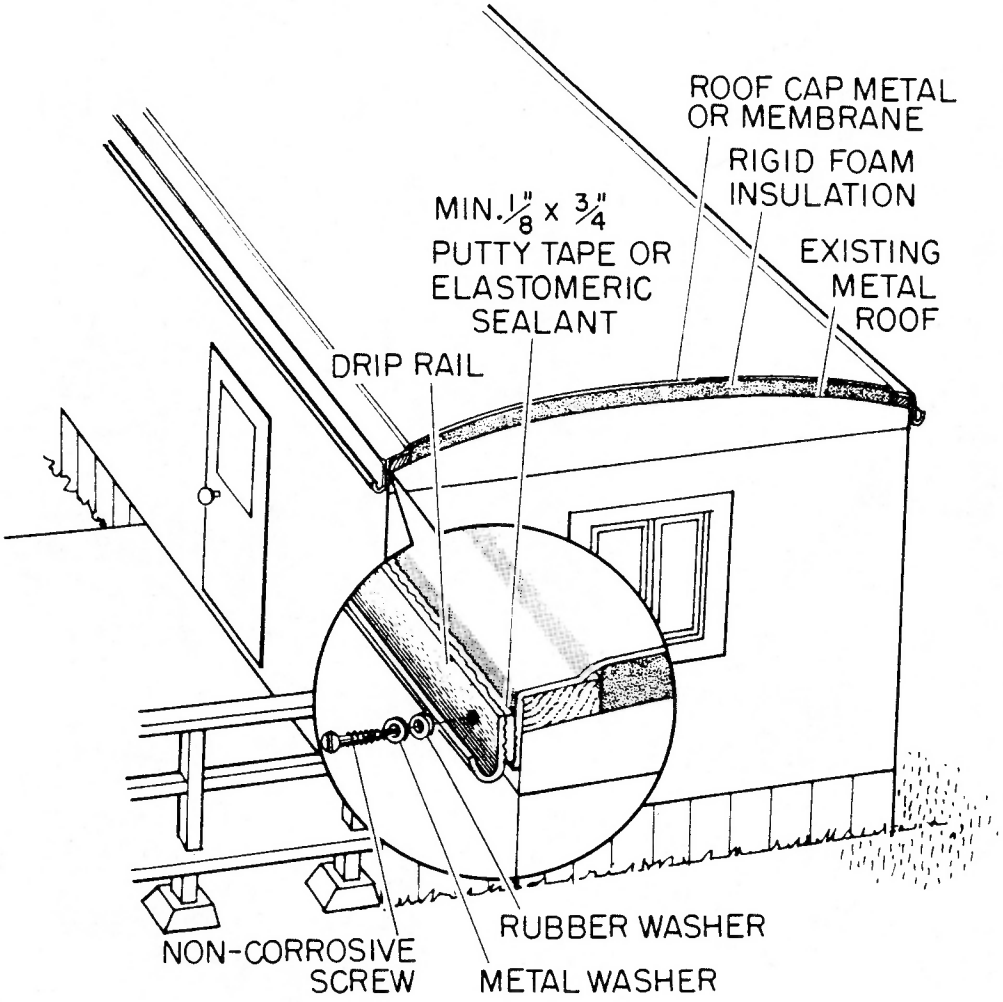

8. ROOF CAP INSULATION SYSTEMS (continued)

G. ROOF CAP INSTALLATION

- Roll-on Metal Roofing and Flexible Membranes
  - Shall be installed, secured, and sealed as prescribed by the manufacturer.
- Individual Panel Metal Roofing
  - Shall be installed, secured, and sealed as prescribed by the manufacturer.
  - Standing seams and end joints shall be sealed with elastomeric sealant unless instructed otherwise by the manufacturer.

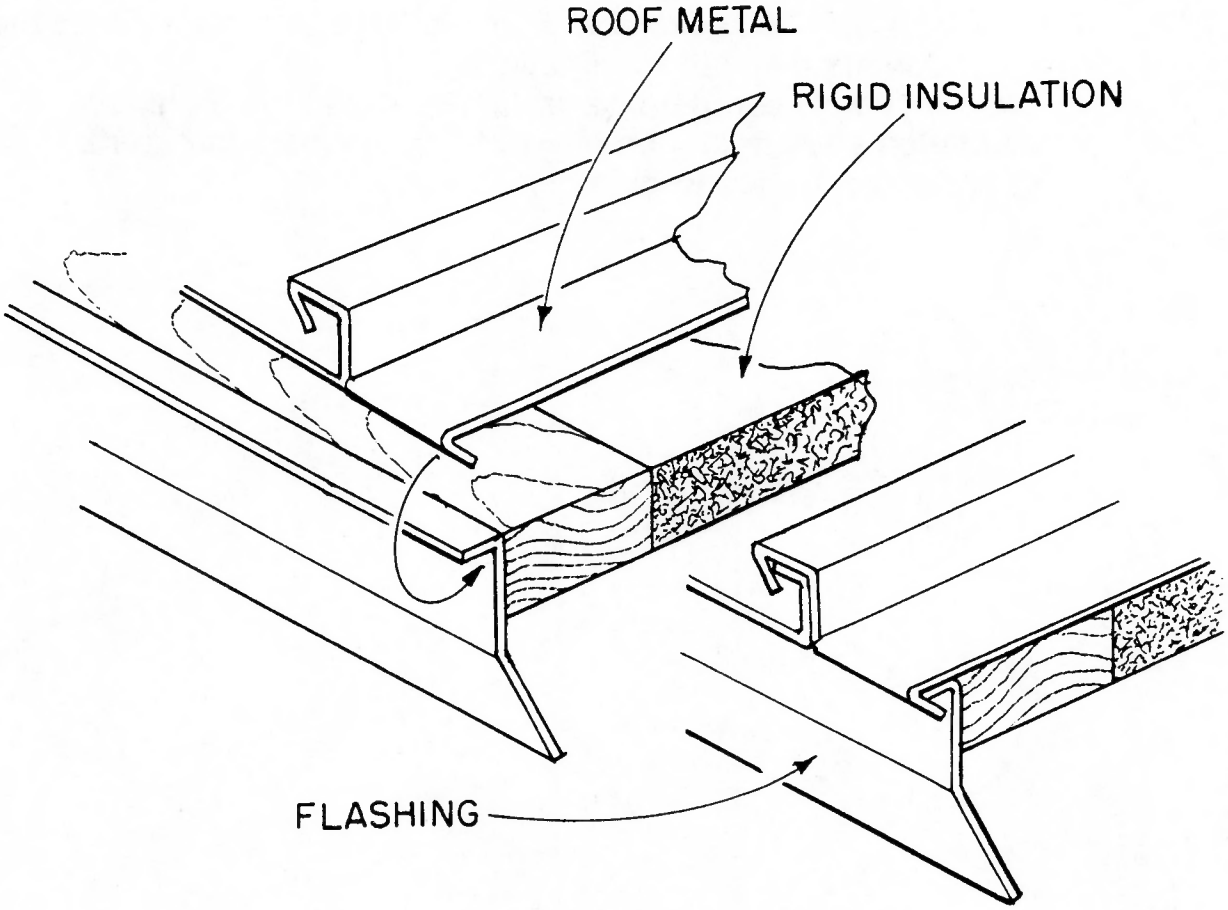

8. ROOF CAP INSULATION SYSTEMS (continued)

H. GAS AND SOLID FUEL APPLIANCE VENTS AND FLASHINGS

- All Roof Cap Systems
  - Each fuel-fired appliance flue and vent shall be a listed assembly specified by the appliance manufacturer.
  - All components shall be installed in accordance with listing specifications, manufacturer's instructions, and applicable codes.
    - Pre-existing, nonconforming conditions shall be corrected.
    - Defective components shall be replaced.
    - When proper height of termination above the new roof cap cannot be achieved through adjustment:
      - Additional listed parts shall be acquired to extend the assembly, <u>or</u>
      - A new listed assembly shall be installed which meets the specified height requirement.
  - Clearance between the flue or vent pipe and the installed insulation shall be the greater of 3" or the manufacturer's specified clearance to combustibles.

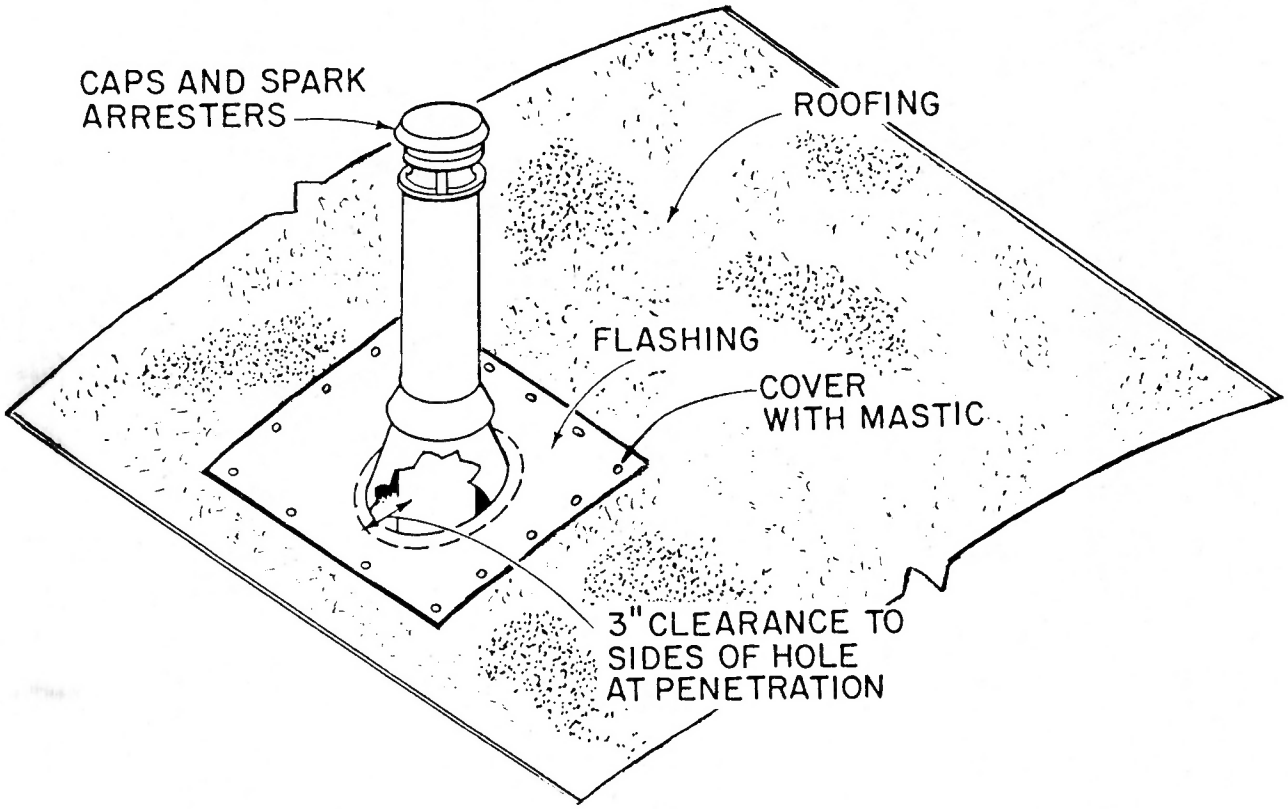

8. ROOF CAP INSULATION SYSTEMS (continued)

I. PLUMBING VENTS, AIR PLENUMS, AND FLASHINGS

- All Roof Cap Systems
  - Plumbing vent pipes shall extend a minimum of 2" above the surface of the roof cap.
  - Exhaust ducts, including those for kitchen and bathroom fans, shall extend through the surface of the roof cap.
  - Extension components shall be:
    - Compatible with existing components.
    - Securely assembled and properly aligned.
    - Installed in conformance with manufacturer's instructions and applicable codes.
  - Evaporative coolers shall be properly reinstalled.
    - The plenum shall extend sufficiently through the roof cap to facilitate installation of a watertight seal.
    - All mounting hardware shall be installed in a manner which provides adequate support and a watertight seal at the surface of the new roof cap.

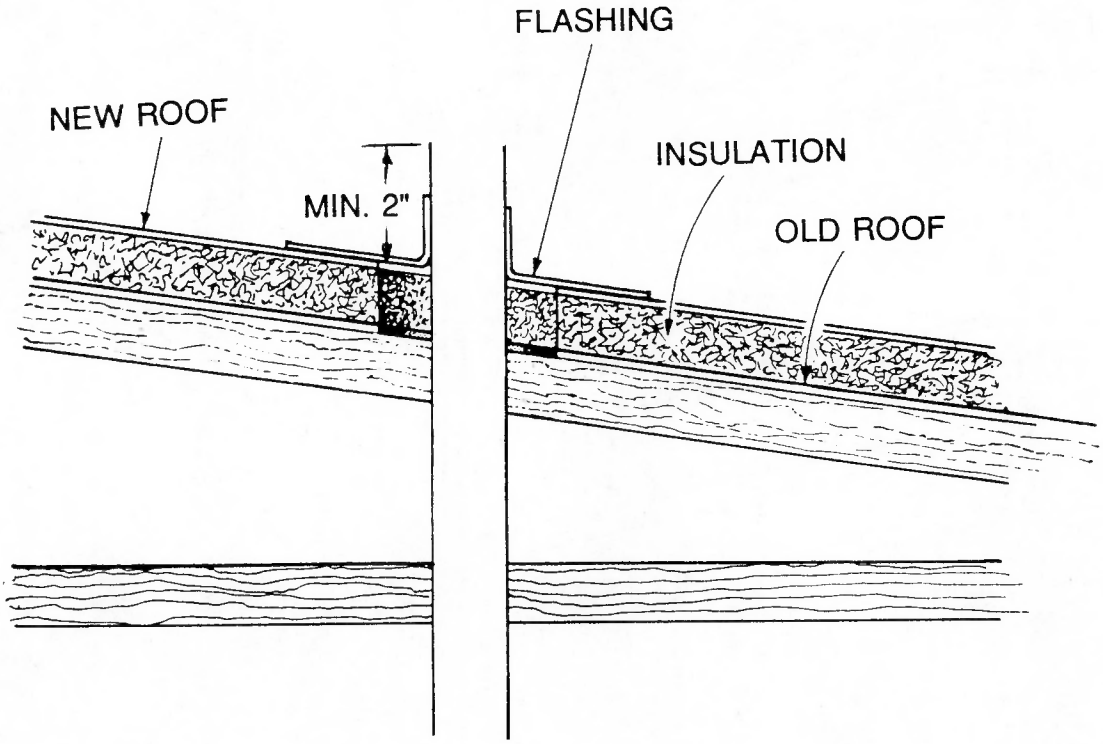

8. ROOF CAP INSULATION SYSTEMS (continued)

J. ROOF CAVITY VENTILATION

- Existing Roof Vents
  - All existing roof cavity vents shall be tightly blocked and sealed.
- Ventilated Walls
  - Bypasses into roof cavities at the top of ventilated walls shall be blocked.
  - Exterior caulking shall <u>not</u> be installed on the top and bottom of ventilated walls.

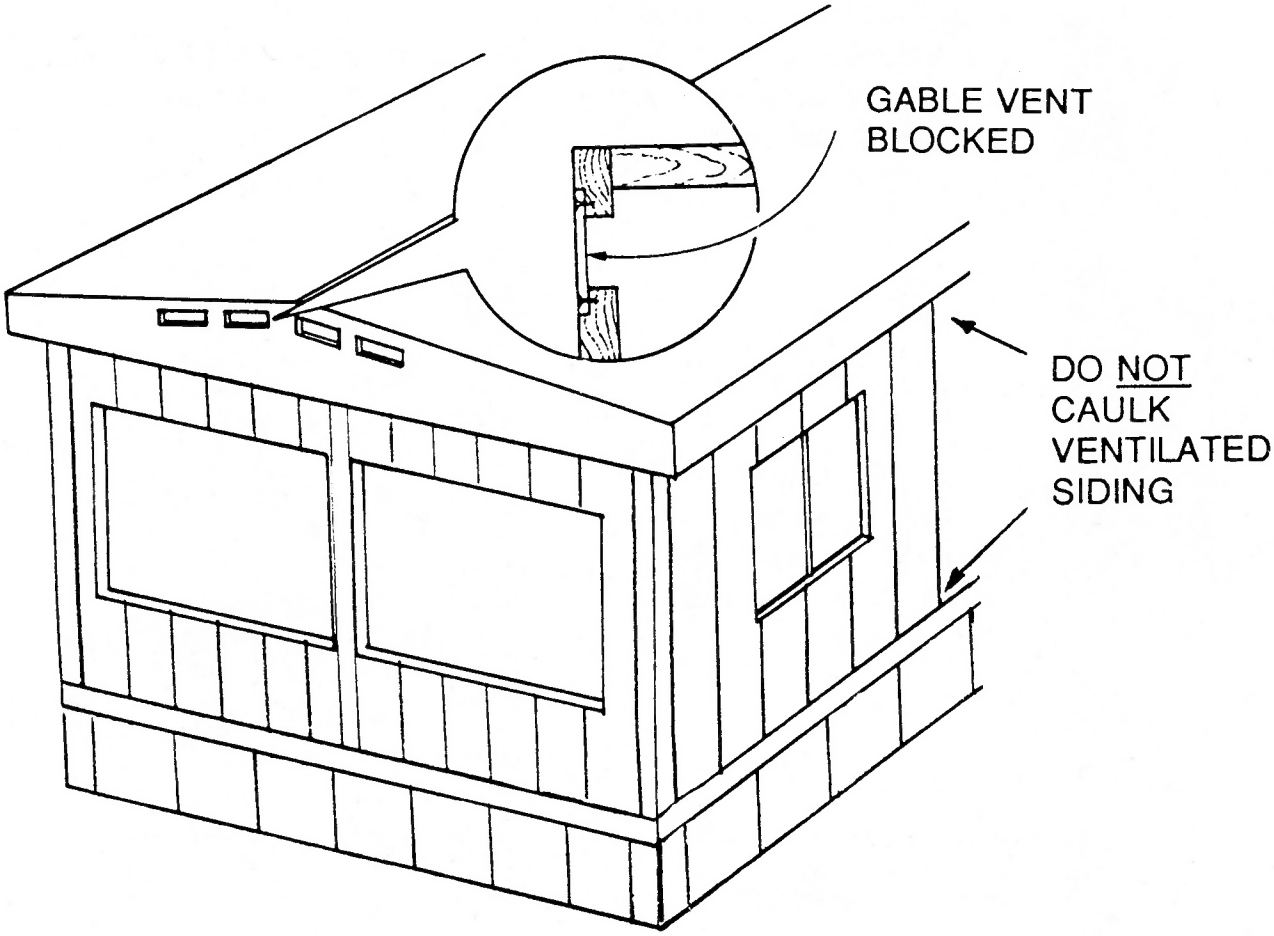

8. ROOF CAP INSULATION SYSTEMS (continued)

K. GABLE END INSULATION

- Truss Height Requirement
  - Gable ends shall be insulated when the truss height is 10" or more at the apex.
- Exterior Surface Mount Method
  - Component Requirements
    - Minimum R-11 rigid insulation covered with a watertight metal enclosure.
    - Minimum .019" aluminum or 30 gauge galvanized steel shall be used for the enclosure.
    - Metal enclosure shall bear a permanent finish which is compatible in color and design with the surrounding materials.
  - Attachment
    - Metal enclosure shall be secured with noncorrosive screws spaced a maximum of 4" OC.
  - Sealing
    - All seams, joints, and penetration points shall be sealed with elastomeric sealant or putty tape.
    - Screws shall be sealed as prescribed in Item 8-F.

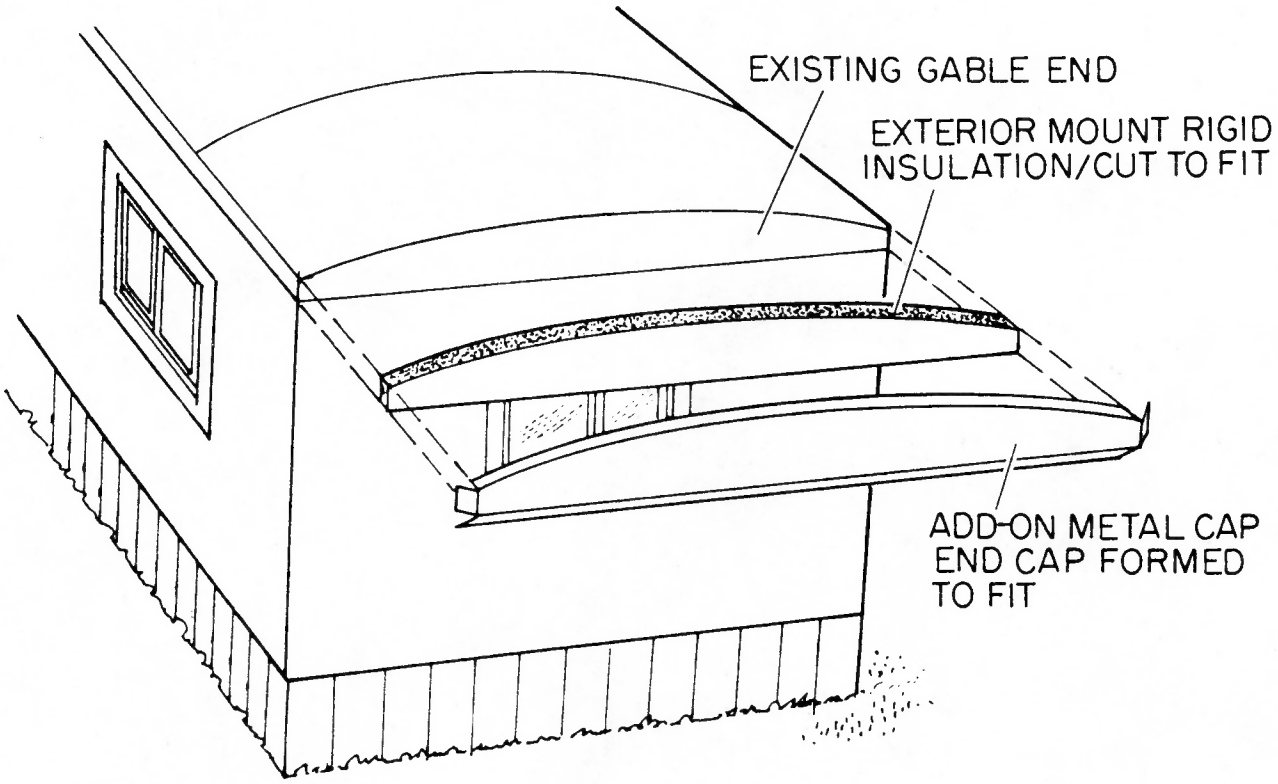

8. ROOF CAP INSULATION SYSTEMS (continued)

K. GABLE END INSULATION (continued)

- **Interior Truss Mount Method**
  - **Application**
    - **This method shall be used only when the gable end siding material can be safely removed and replaced.**
    - **Insulation shall be securely installed within or behind the exposed gable end framework.**
  - **Recommended Materials**
    - **Flexible or rigid mineral fiber insulation.**
    - **Foam <u>not</u> allowed unless ceiling is minimum 5/16" gypsum or equivalent.**

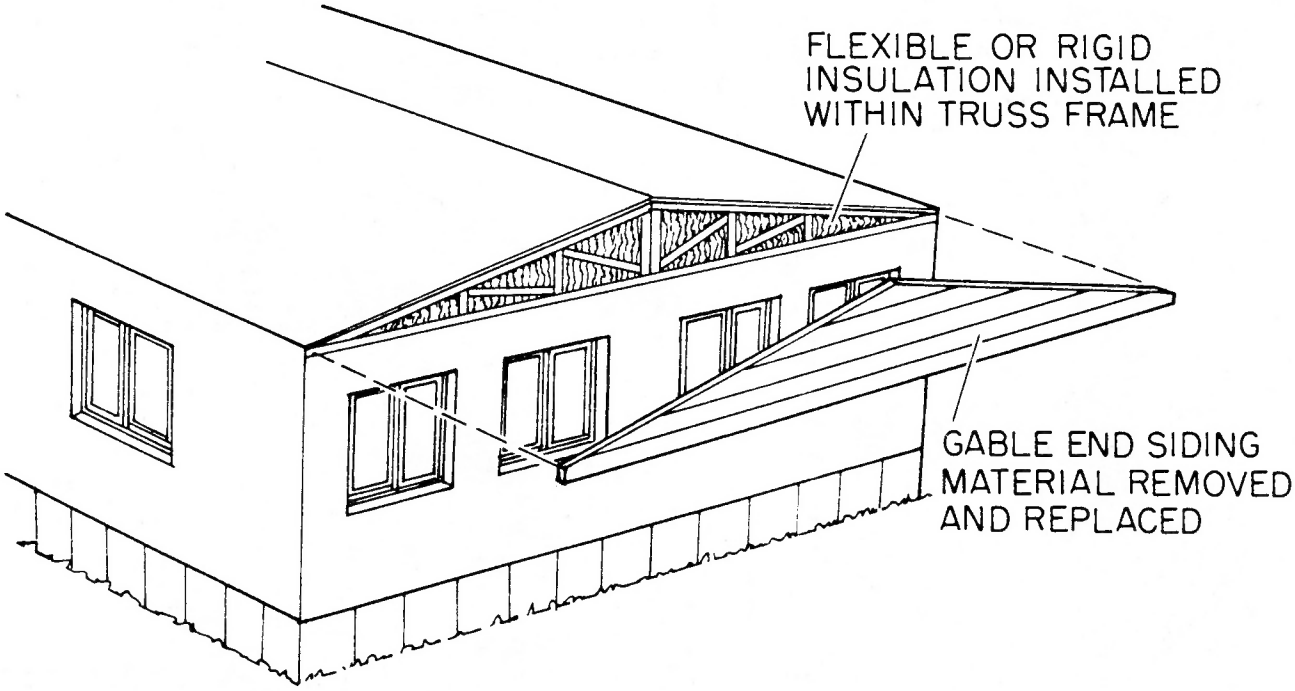

8. ROOF CAP INSULATION SYSTEMS (continued)

K. GABLE END INSULATION (continued)

- Cavity Fill Method
  - This method shall be used only when the ceiling structure is capable of supporting the weight of the added insulation and the blowing pressure.
  - Application
    - The truss cavity immediately adjacent to each gable end shall be completely filled with loose fill fiberglass to create a thermal barrier over the entire gable end.
  - Exterior gable end access
    - Siding material or vent grilles may be removed or holes may be cut or drilled for access.
    - Gable end shall be returned to watertight condition with all holes and vents blocked and sealed in an aesthetically pleasing manner.
  - Exterior roof-edge access
    - As prescribed in Item 9, "Exterior Roof Edge Cavity Fill".
  - Interior ceiling bore access
    - As prescribed in Item 10, "Interior Ceiling Bore Cavity Fill".

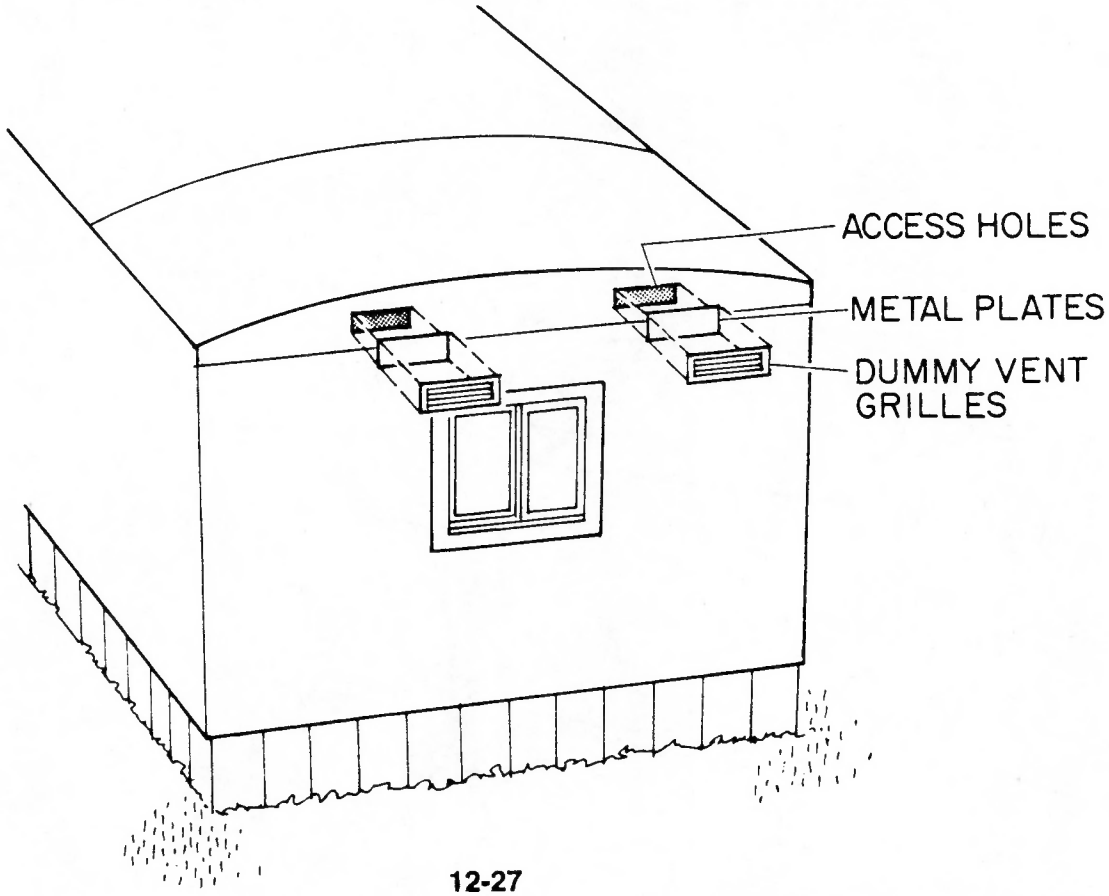

8. ROOF CAP INSULATION SYSTEMS (continued)

L. MINIMUM WARRANTIES

- Manufactured Roof Cap Packaged Systems: 15 years.
- Metal Roll-On Roof Caps and Individual Panels: 15 years.
- Flexible Membranes: 15 years.
- Sealants and Glues: 15 years.
- Paints and Reflective Coatings: 10 years.
- Installation Contractor: 3 years.

M. CONTRACTOR'S LICENSE

- All installations shall be performed by licensed contractors.
- Licenses required shall be determined by the authority having jurisdiction over mobile home alterations.

N. ALTERATION PERMITS

- Permits shall be acquired from the authority having jurisdiction over mobile home alterations.

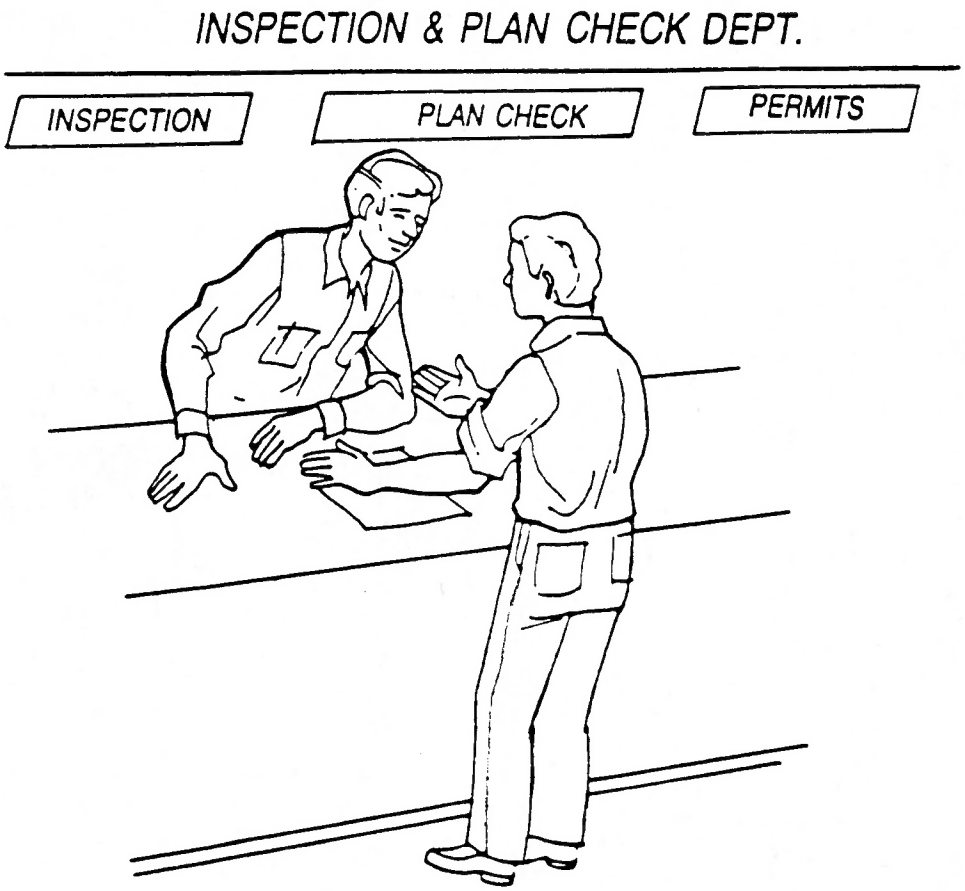

9. EXTERIOR ROOF EDGE CAVITY FILL

A. ROOF CONSTRUCTION REQUIREMENTS

- Roof Types Allowed
  - Roof edge cavity fill shall be restricted to roofs which:
    - Are covered by metal roofing material.
    - Do not contain an underlayment of wood sheathing.
    - Can feasibly be detached and lifted in segments along the edge.
    - Have sufficient height to allow a minimum R-11 pressure fill.

B. INSULATING MATERIALS

- Recommended Materials
  - Loose fill fiberglass
- Material Specifications
  - As prescribed in Item 3.
- Material Restrictions
  - Common blowing materials not allowed due to greater weight and propensity for moisture absorption:
    - Cellulose
    - Rock wool

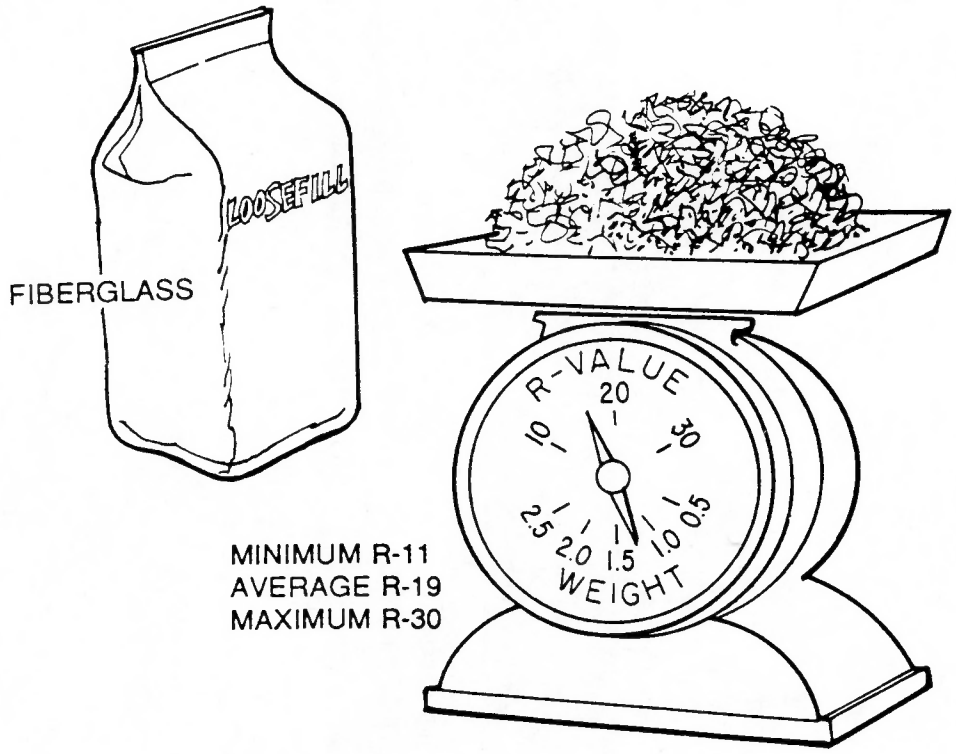

9. EXTERIOR ROOF EDGE CAVITY FILL (continued)

C. PRE-INSTALLATION REQUIREMENTS

- General Provisions
  - Requirements set forth in Items 4-7 shall be met.
- Roof Condition
  - Existing roof shall be free of damage and deterioration which would prevent restoration to a watertight condition following installation.

D. HEAT SOURCE BAFFLING

- Location Requirements
  - All recessed lights, furnace flues, water heater vent pipes, and other heat-producing devices shall be protected with a non-combustible barrier.
- Barrier Requirements
  - All protective barriers shall:
    - Be permanently secured.
    - Extend from the ceiling to the lesser of 4" above the insulation or to the roof.
    - Completely surround the heat-producing device.
    - Provide a minimum 3" airspace on all sides.

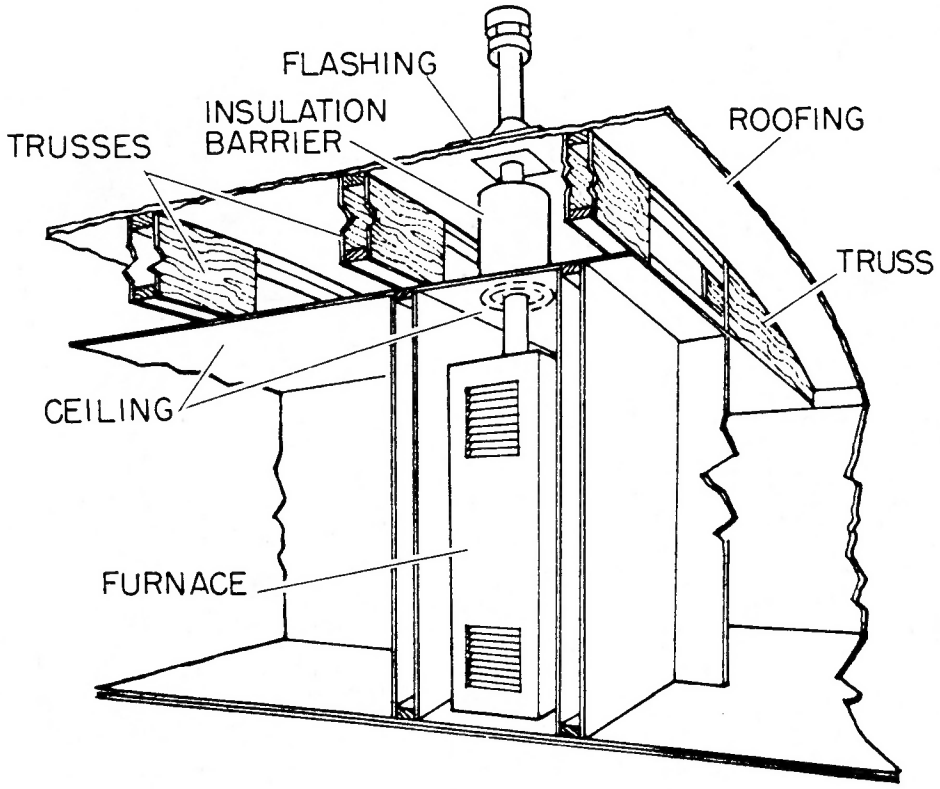

9. EXTERIOR ROOF EDGE CAVITY FILL (continued)

D. HEAT SOURCE BAFFLING (continued)

- Barrier Installation Access
  - Access for installation may include the removal of:
    - The heat-producing device.
    - The ceiling trim or trim collar.
    - A small amount of ceiling material immediately surrounding the heat-producing device.
    - The roof flashing.
- Post Baffling Requirements
  - Heat-producing devices removed shall be properly reinstalled.
  - Gaps created by removing ceiling material shall be filled with the material removed or other appropriate material as needed.
  - Ceiling collars and other trim material shall be properly reinstalled.
  - All ceiling air leaks created during baffling shall be sealed as prescribed in Sections 2 and 4.

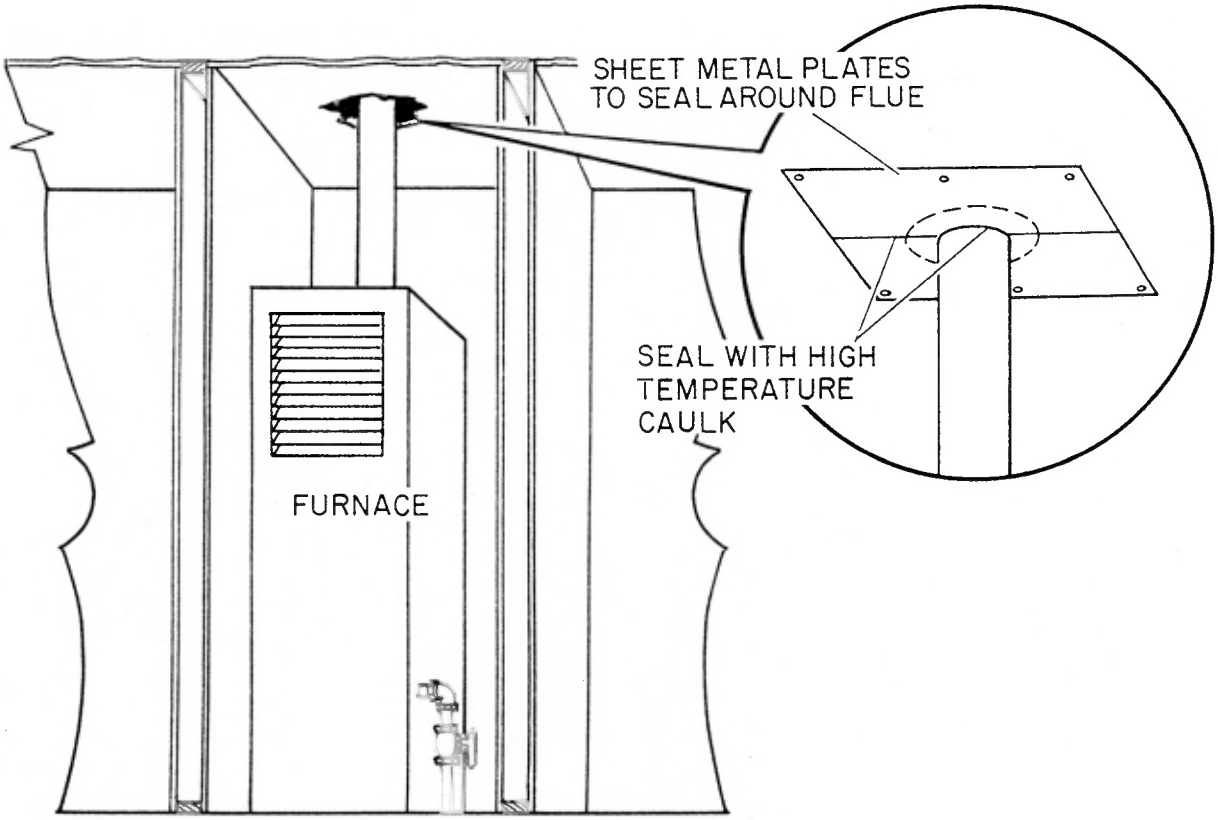

9. EXTERIOR ROOF EDGE CAVITY FILL (continued)

E. CAVITY-FILL ACCESS

- Metal Roof Lifting
  - The roof edge shall be lifted and temporarily supported only as required to access the truss space where the fill tube is inserted.
  - Roll-back of metal roofing is <u>not</u> allowed.
- Bypass Sealing
  - Utility penetrations and other holes in the top plate shall be sealed while the roof is lifted.
  - Eave vents and wall bypasses which communicate with the roof cavity shall be blocked and sealed.

F. ROOFING REASSEMBLY

- Metal Roofing
  - Metal roofing shall be returned to its original position and reattached securely with noncorrosive fasteners (screws, staples, etc.).
    - Attachments shall penetrate wooden framework 3/4" minimum.
    - Staples shall be installed in new locations.
    - Screws placed in existing holes shall be sized to achieve a tight, secure attachment.

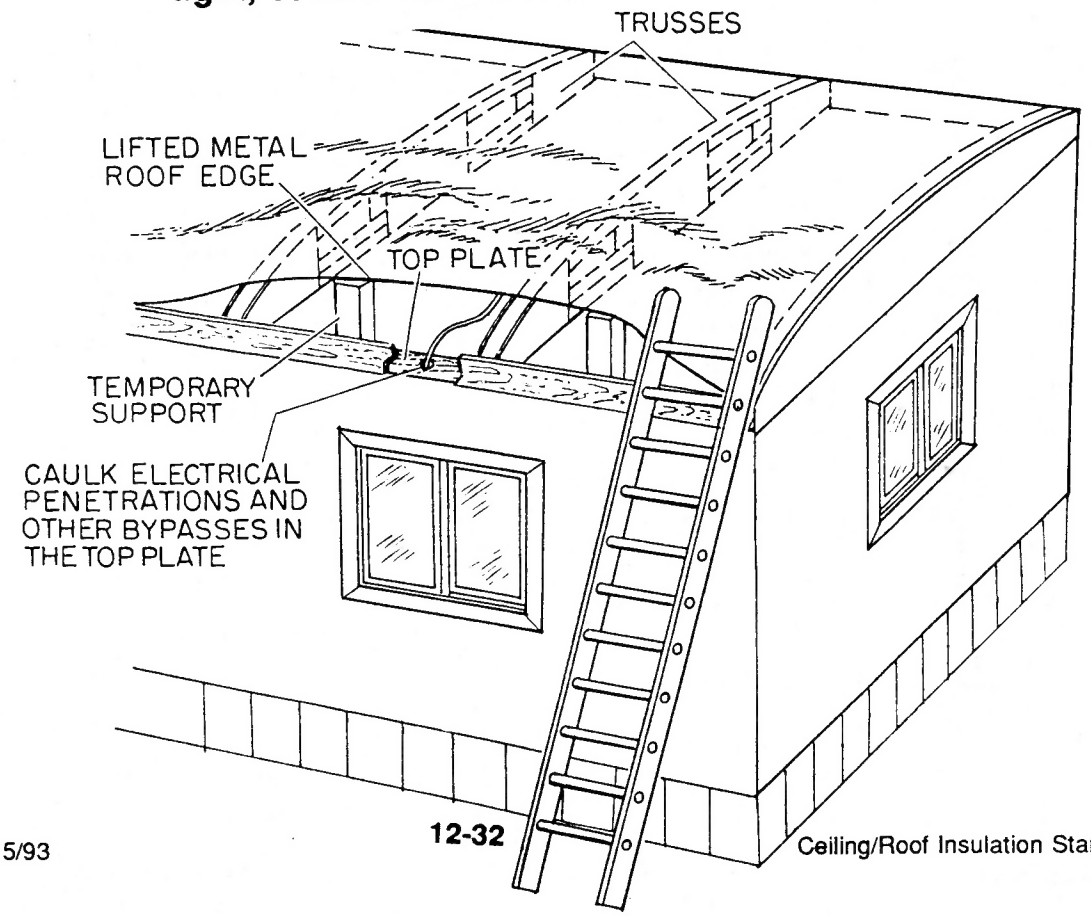

9. EXTERIOR ROOF EDGE CAVITY FILL (continued)

G. LOOSE-FILL INSTALLATION

- Fill Tube Requirements
  - Maximum insulation travel shall be 2' past end of fill tube.
  - Fill tube diameter shall be 2" minimum.
- Blower Controls
  - Installer shall be equipped with a remote switch to control the blowing machine.
- Density of Cavity Fill
  - Insulation thickness and density shall meet the R-Value requirements specified in Item 1.
- Ceiling Performance and Repair
  - Excessive ceiling panel deflection caused by insulation weight and pressure shall be corrected.
    - Loose attachments shall be tightened.
    - Additional attachments shall be added, as needed, to secure ceiling panels to joists.
    - Other remedial action shall be taken as needed.
    - Maximum ceiling panel deflection after cavity fill shall be 1/4" in 4' of lateral run.

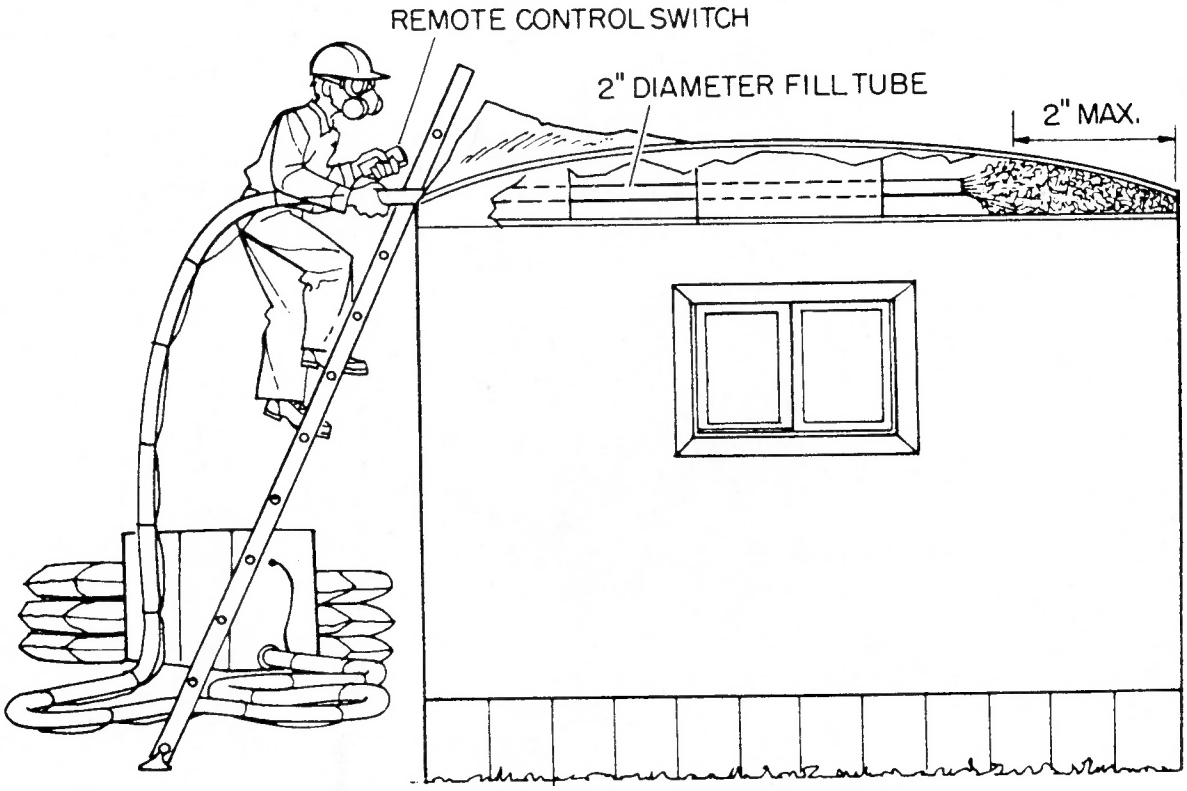

9. EXTERIOR ROOF EDGE CAVITY FILL (continued)

H. ROOF EDGE COMPONENT REASSEMBLY AND SEALING

- Components
  - Damaged drip rail, flashing, etc., shall be replaced with compatible materials, as needed, to assure proper performance.
- Attachment
  - Roofing shall be reattached with noncorrosive screws, nails, or staples at least 3/4" in length.
  - Drip rail and flashing shall be securely attached with screws which penetrate the wooden framework at least 3/4".
    - Screws shall be #8 or larger and noncorrosive.
- Sealing
  - Long-life sealant shall be applied between the metal roof and the attached components to create a permanent watertight seal at all penetration points.
    - Minimum 1/8" putty tape or elastomeric sealant required.
  - Exposed screws shall be sealed with a tight-fitting rubberized metal washer, or metal and rubber washer combination.
  - Elastomeric sealant shall be applied to exposed seams and screw heads as needed to achieve a permanent, watertight seal.

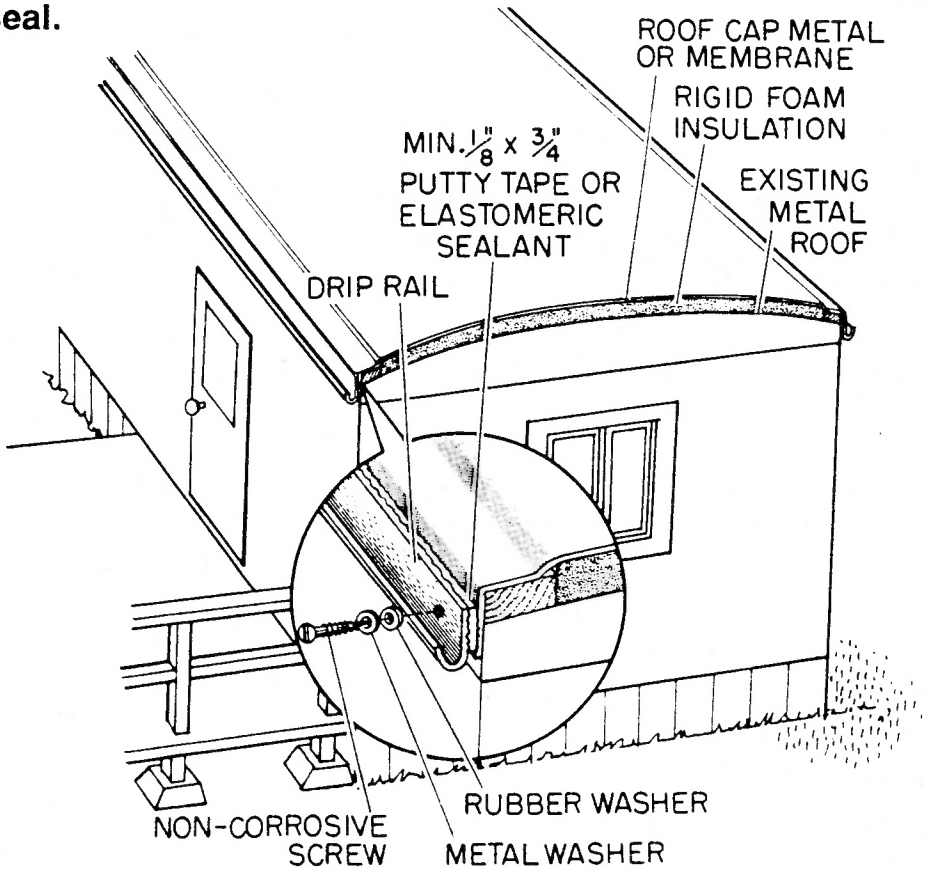

9. EXTERIOR ROOF EDGE CAVITY FILL (continued)

I. POST-INSTALLATION ROOF INSPECTION AND REPAIR

- Seams
  - All roof seams shall be inspected, and those with evidence of damage or potential leakage shall be sealed.
- Roof Penetration Flashings
  - All affected flashings and termination devices shall be reinstalled, secured, and properly sealed.
- Roof Coatings and Repairs
  - Roof repairs and sealing shall be in conformance with Item 7.
  - The finished roof shall be secure and watertight.
  - Roof coating damaged during installation shall be repaired.
  - All repair materials shall be compatible with existing surfaces, appropriate for the application, and installed as prescribed by the manufacturer.

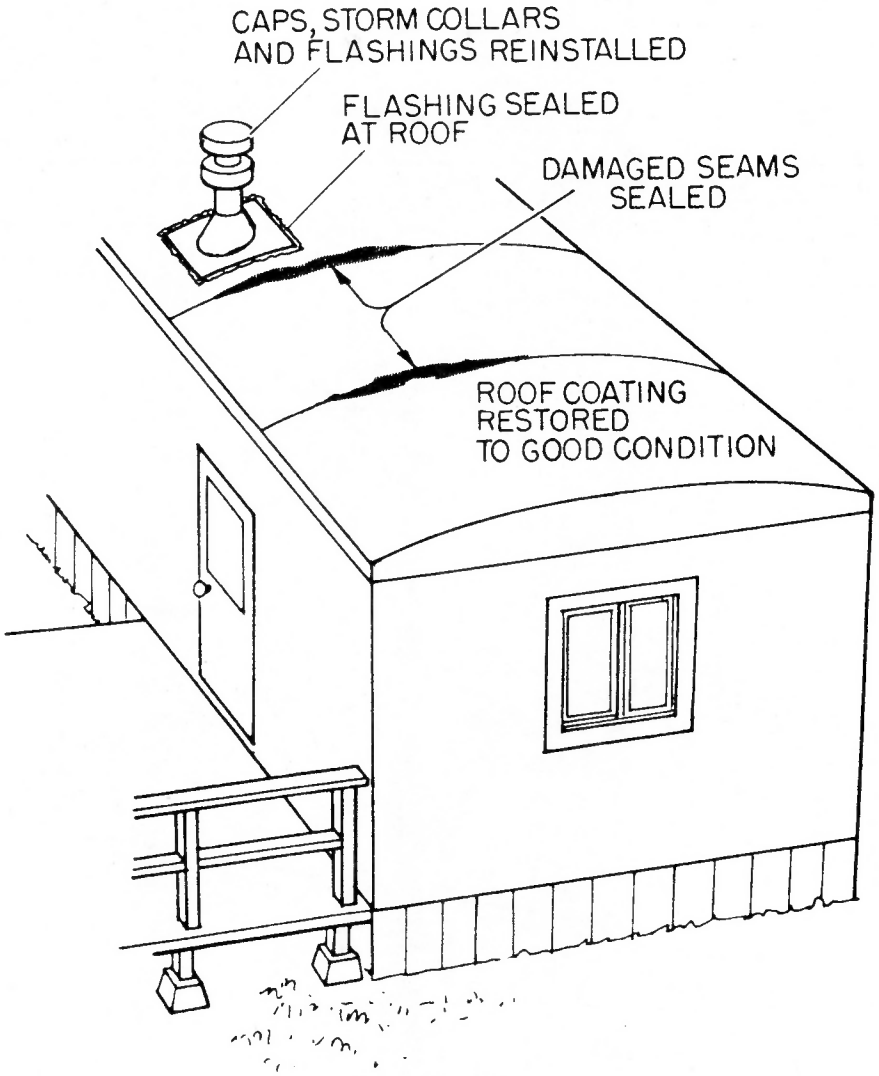

9. EXTERIOR ROOF EDGE CAVITY FILL (continued)

J. MINIMUM WARRANTIES

- Elastomeric Sealants: 15 years.
- Roof-Sealing Coatings: 15 years.
- Paints and Reflective Coatings: 10 years.
- Installation Contractor: 3 years.

K. CONTRACTOR'S LICENSE

- All installations shall be performed by licensed contractors.
- Licenses required shall be determined by the authority having jurisdiction over mobile home alterations.

L. ALTERATION PERMITS

- Permits shall be acquired when required by the authority having jurisdiction over mobile home alterations.

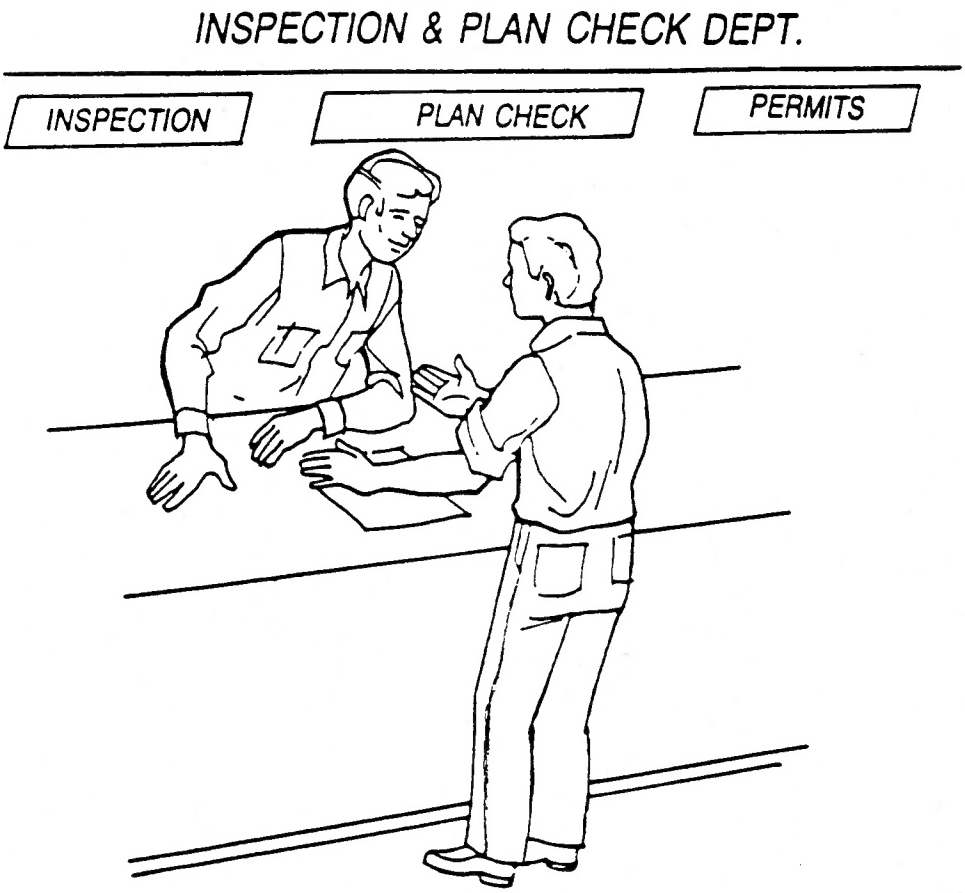

10. INTERIOR CEILING BORE CAVITY FILL

A. ROOF HEIGHT REQUIREMENT

- All Roof Types
  - Roof cavity shall have sufficient height to allow a minimum R-11 pressure fill.

B. INSULATING MATERIALS

- Recommended Materials
  - Loose Fill Fiberglass
- Material Specifications
  - As prescribed in Item 3.
- Material Restrictions
  - Common blowing materials <u>not</u> allowed due to greater weight and propensity for moisture absorption:
    - Cellulose
    - Rock Wool

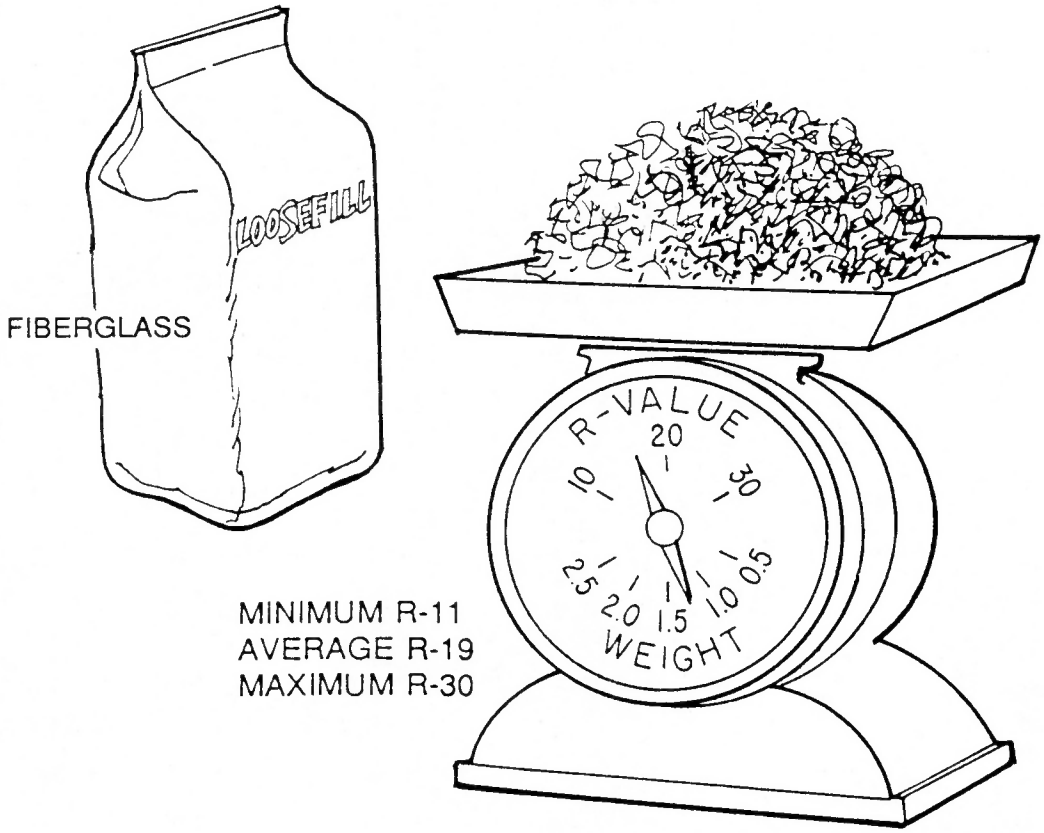

10. INTERIOR CEILING BORE CAVITY FILL (continued)

C. PRE-INSTALLATION REQUIREMENTS

- General Provisions
  - Requirements set forth in Items 4-7 shall be met.
- Interior Preparation
  - All floors, furniture, appliances, clothing, and other personal belongings shall be protected with drop cloths and other appropriate means.

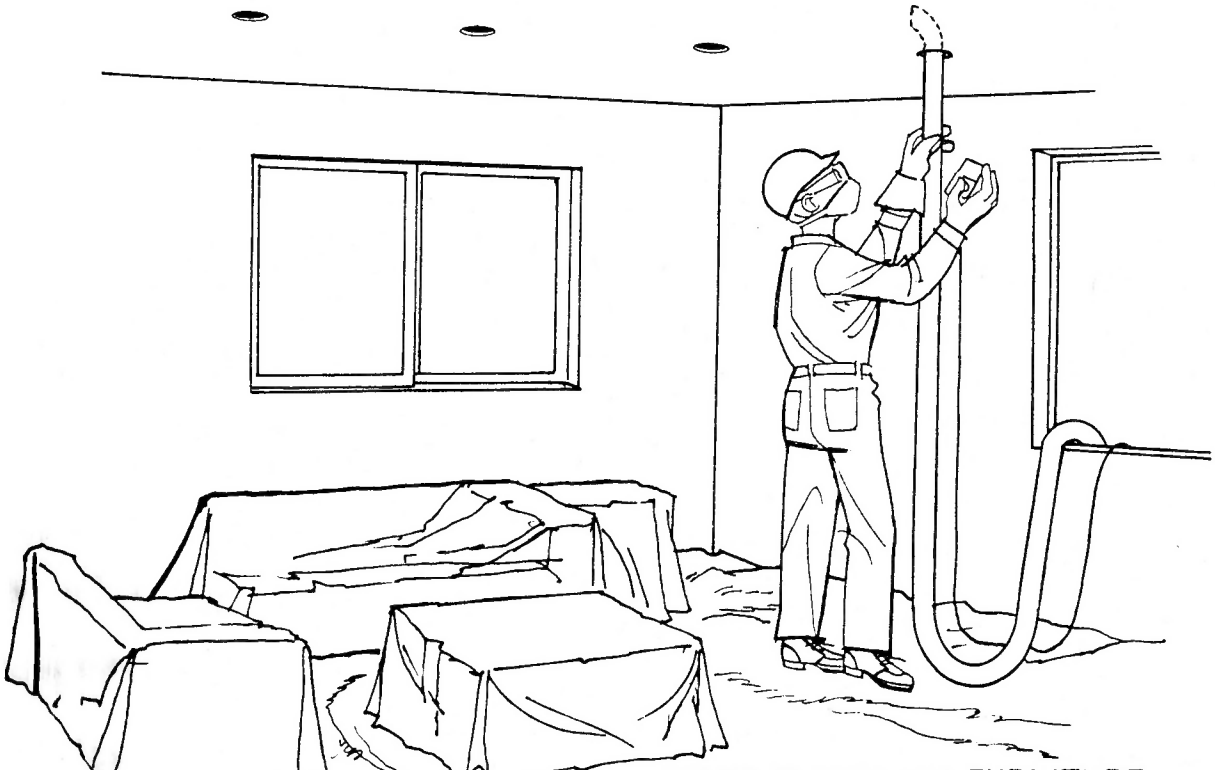

COVER FLOORS AND FURNITURE BEFORE INSULATION BLOWS

10. INTERIOR CEILING BORE CAVITY FILL (continued)

D. HOLE SIZE

- All Materials
  - 2" minimum diameter.

E. HOLE SPACING

- All Ceiling Blows
  - Holes shall be placed so that insulation travel is 2' maximum.
  - All holes shall be placed in a straight line except where structural obstructions force deviation.

F. NOZZLE SIZE AND TYPE

- All Ceiling Blows
  - Nozzle diameter shall be no more than 1/2" smaller than hole diameter, to limit dust and blow-back.
  - Directional type nozzle, curved pipe or flex tube shall be used to direct blow in a 360° coverage pattern.

G. BLOWER CONTROLS

- All Ceiling Blows
  - Installer shall be equipped with a remote control switch to control the blowing machine.

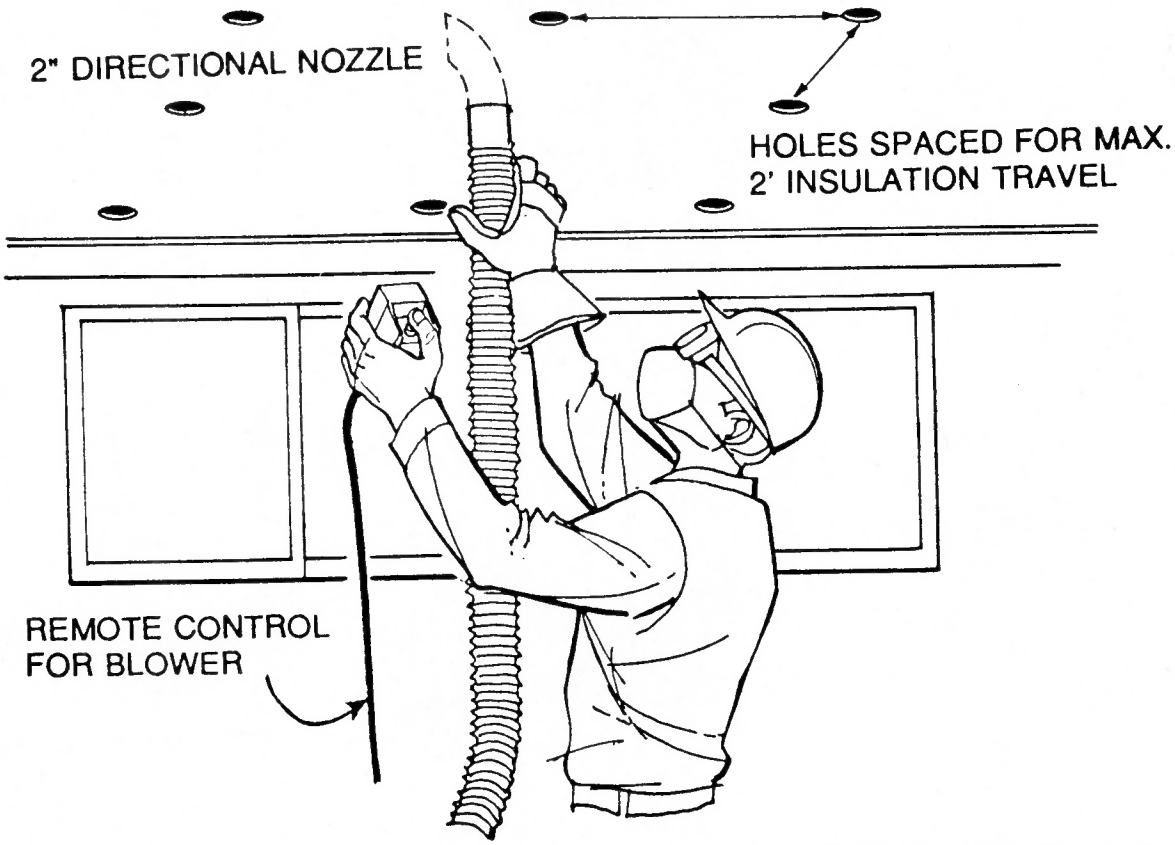

10. INTERIOR CEILING BORE CAVITY FILL (continued)

H. HEAT SOURCE BAFFLING

- Location Requirements
  - All recessed lights, furnace flues, water heater vent pipes, and other heat-producing devices shall be protected with a noncombustible barrier.
- Barrier Requirements
  - All protective barriers shall:
    - Be permanently secured.
    - Extend from the ceiling to the lesser of 4" above the insulation or to the roof.
    - Completely surround the heat-producing device.
    - Provide a minimum 3" airspace on all sides.

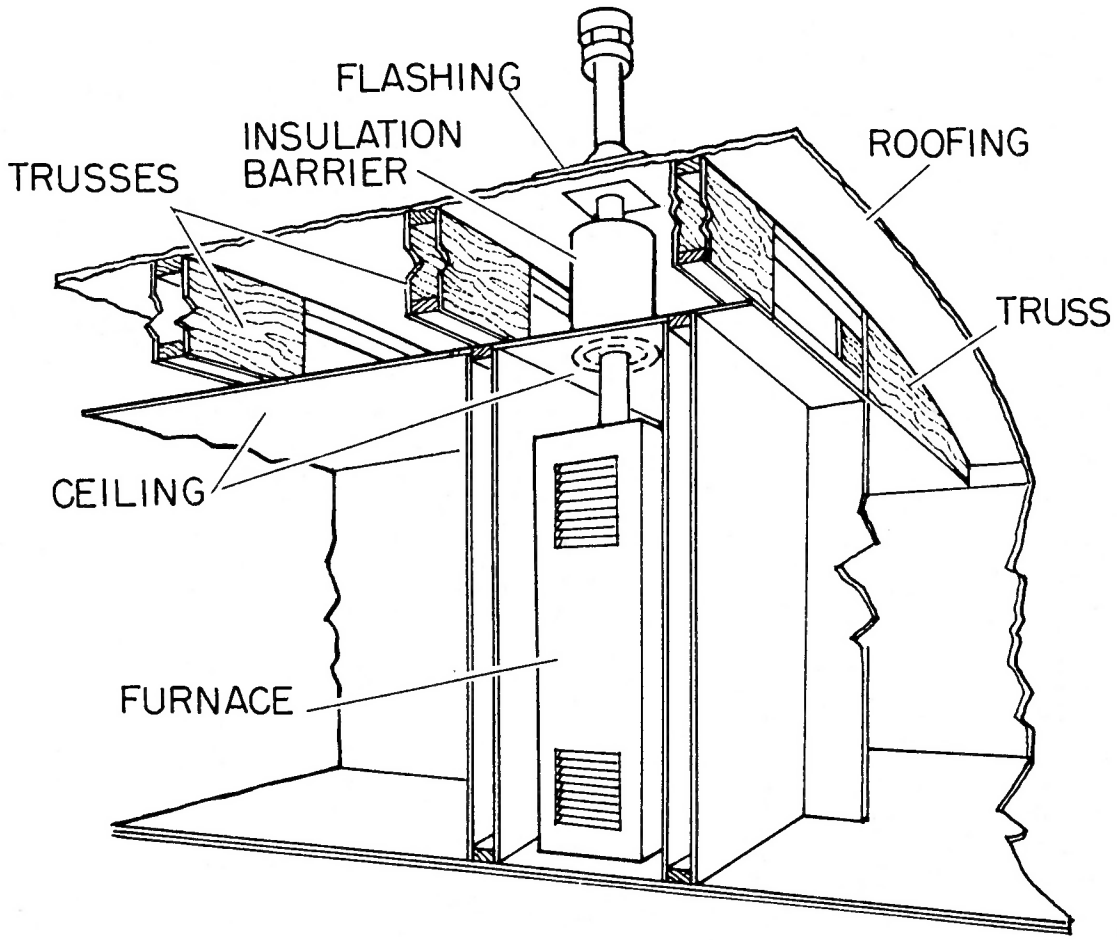

10. INTERIOR CEILING BORE CAVITY FILL (continued)

H. HEAT SOURCE BAFFLING (continued)

- Barrier Installation Access
  - Access for installation may include:
    - Removal of the heat-producing device.
    - Removal of the ceiling trim or trim collar.
    - Removal of a small amount of ceiling material immediately surrounding the heat-producing device.
    - Removal of the roof flashing.
- Post-Baffling Requirements
  - Heat producing devices removed shall be properly reinstalled.
  - Gaps created by removing ceiling material shall be filled with the material removed or other appropriate material.
  - Ceiling collars and other trim material shall be properly reinstalled.
  - All ceiling air leaks created during baffling shall be sealed as prescribed in Sections 2 and 4.

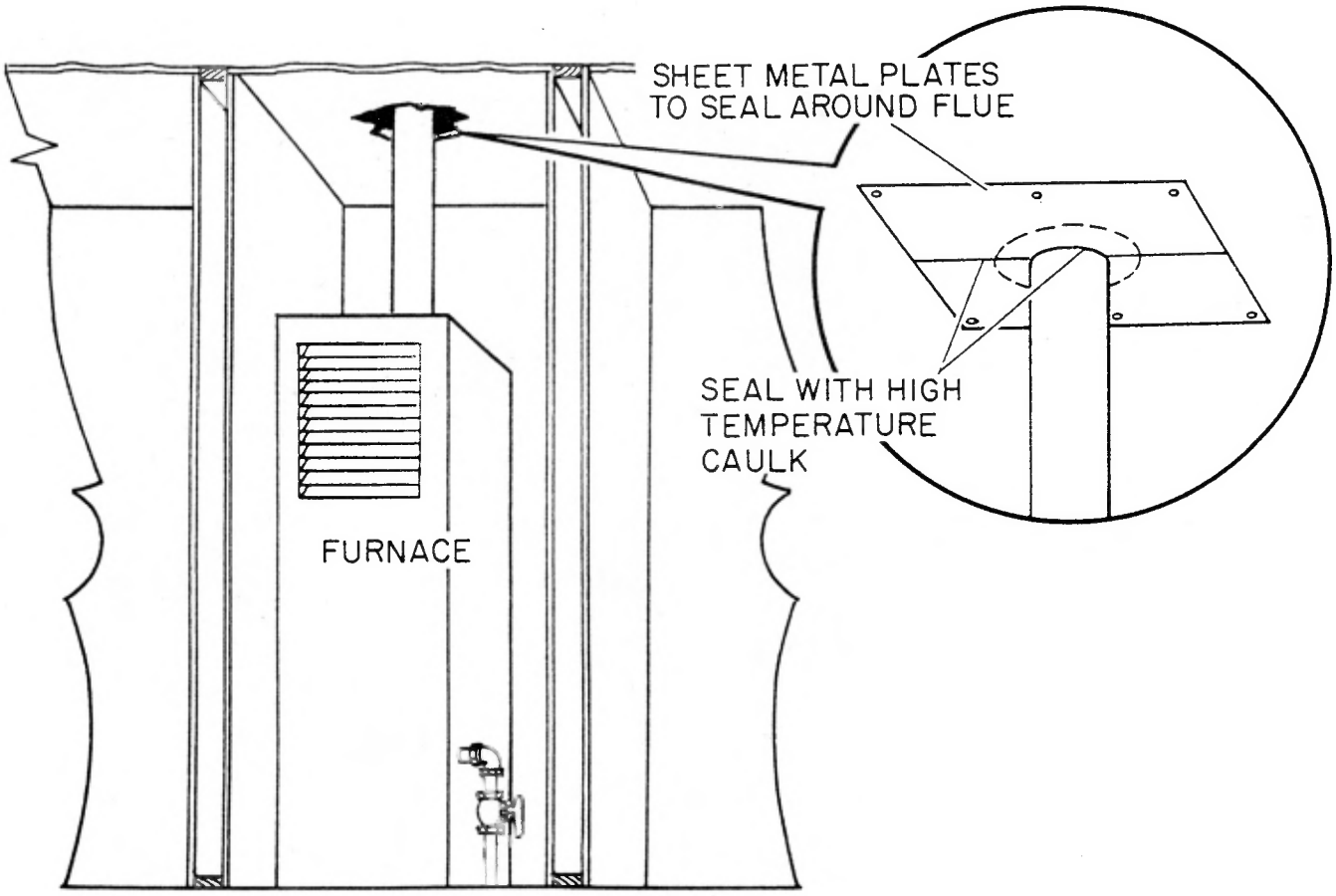

10. INTERIOR CEILING BORE CAVITY FILL (continued)

I. LOOSE-FILL INSTALLATION

- Material Placement
  - Fill hole shall extend through existing vapor barrier and insulation.
  - Loose-fill shall be installed on top of existing insulation.
- Density of Cavity Fill
  - Insulation thickness and density shall meet the R-value requirements specified in Item 1.
- Ceiling Performance and Repair
  - Excessive ceiling panel deflection caused by insulation weight and pressure shall be corrected.
    - Loose attachments shall be tightened.
    - Additional attachments shall be added, as needed, to secure ceiling panels to joists.
    - Other remedial action shall be taken as needed.
    - Maximum ceiling panel deflection after cavity fill shall be 1/4" in 4' of lateral run.

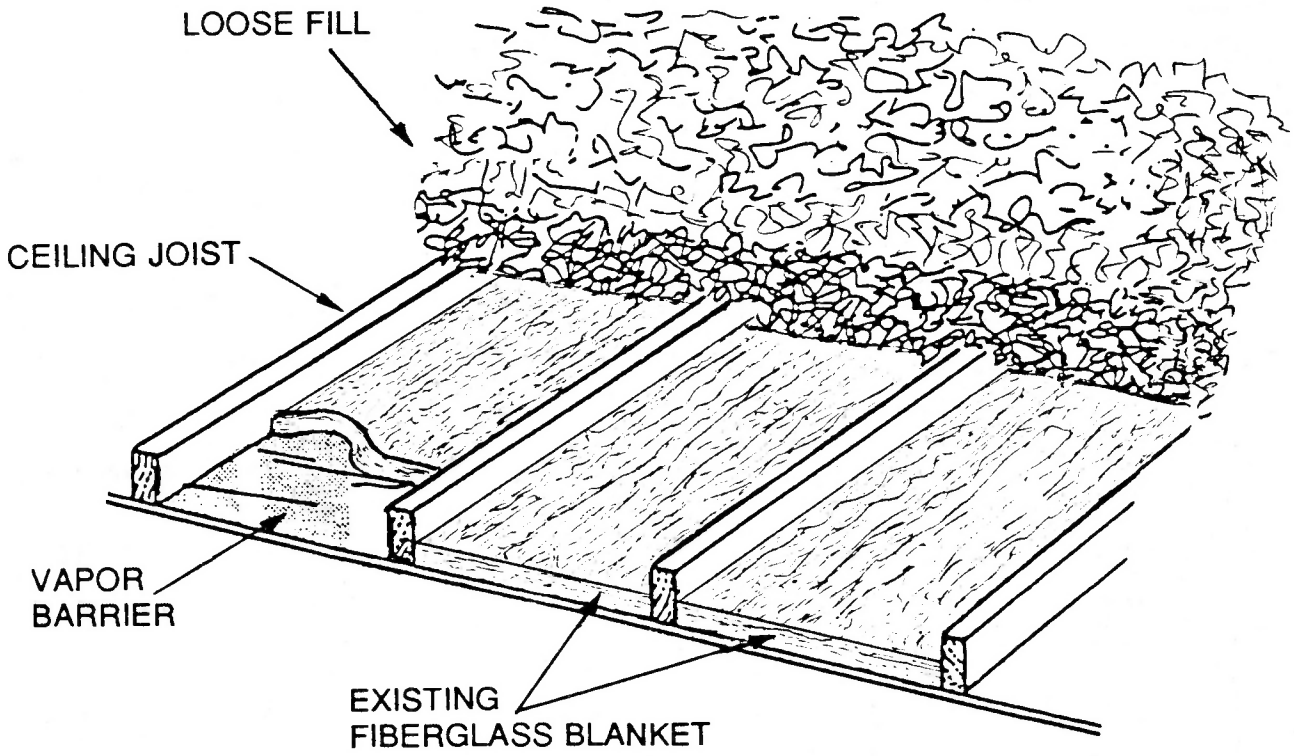

10. INTERIOR CEILING BORE CAVITY FILL (continued)

J. PLUGS

- Plastic plugs acceptable.
- Custom made plugs matching existing ceiling material preferred.
- All plugs shall be sealed in place with caulking, construction adhesive, or other appropriate sealant.

K. POST-INSTALLATION REQUIREMENT

- Full vacuuming and clean-up required.

L. MINIMUM WARRANTIES

- Sealants: 15 years.
- Installation Contractor: 3 years.

M. CONTRACTOR'S LICENSE

- All installations shall be performed by licensed contractors.
- Licenses required shall be determined by the authority having jurisdiction over mobile home alterations.

N. ALTERATION PERMITS

- Permits shall be acquired when required by the authority having jurisdiction over mobile home alterations.

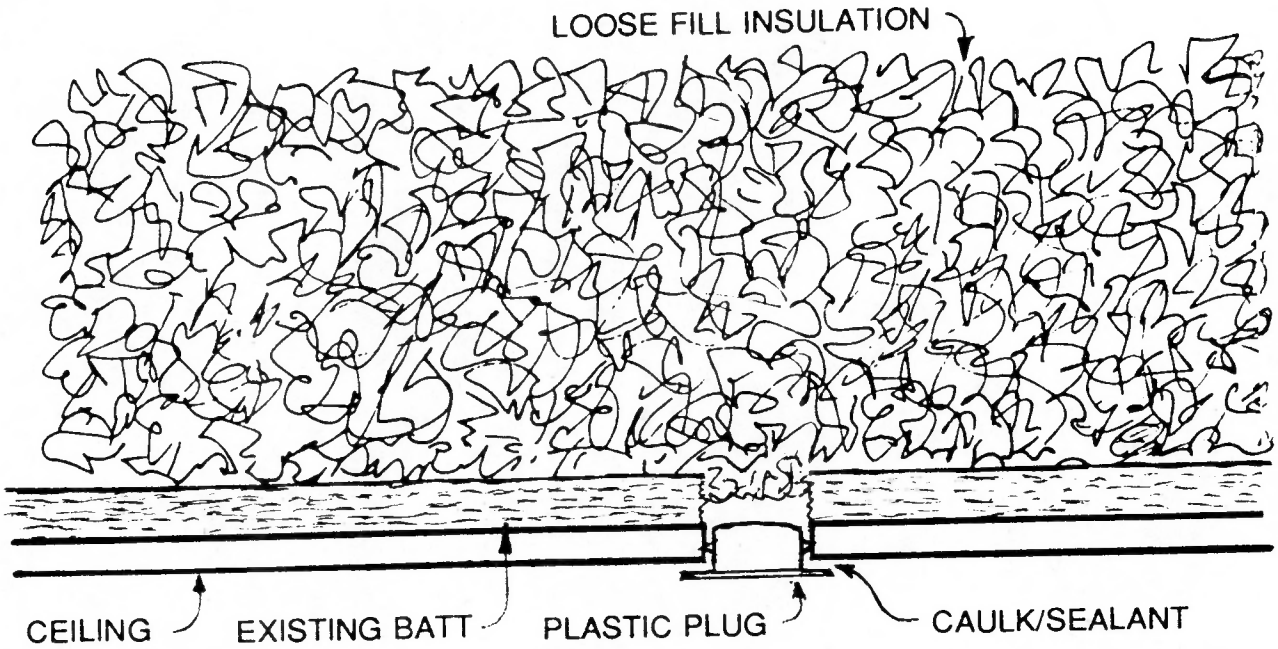

NONFEASIBILITY CRITERIA FOR CEILING/ROOF INSULATION

1. Deemed <u>not</u> cost effective by audit.

2. <u>Not</u> allowed by the authority having jurisdiction.

3. Roof structure incapable of handling added weight of insulation and snow load.

4. Roof cavity too shallow for minimum required R-value cavity fill.

5. Ceiling panels <u>not</u> capable of supporting added weight of insulation and blower pressure.

6. Roof condition too poor to be feasibly repaired.

SECTION 13

UNDERCARRIAGE INSULATION

PREFACE

Recent studies have shown that, after roof cavity insulation, an undercarriage blow is an effective insulation measure that is feasible for the average older mobile home.

Proper installation of undercarriage insulation requires attention to many details. A weak or damaged bellyboard (rodent barrier) must first be repaired. Leaks and separations in the duct system and all plumbing leaks must be fixed. Large holes in the floor, such as plumbing and duct penetrations, must be sealed. The size, condition, and orientation of the floor joists and the location of ducts, plenums, plumbing, and electrical wires must be examined.

Belly injection (through holes in the bellyboard) is the preferred approach, partially because it does not require exterior trim removal, possible siding damage, and weakening of the room joists. It also offers more flexibility because access holes can be placed anywhere needed to reach any cavity. A directional nozzle may be used to blow 2' in each direction. A flexible fill hose capable of penetrating the cavity can be used to blow up to 14' in each direction.

Injection through the end rim joists requires a fill tube nearly half the length of the mobile home. This method requires only one hole per joist cavity in each end of the unit, but it does not eliminate the need to work in the crawl space. The bellyboard must still be inspected and possibly repaired. Inspection holes may be required to explore the joist cavity and repair duct and plumbing leaks. Also some isolated areas not accessible from the perimeter may require belly injection.

Side rim joist injection requires some extra care. Since weakening of the joist is a concern, it must be of adequate quality and size (2" x 6" minimum) to accommodate the injection holes. When possible, adjacent joist cavities should be accessed from alternate sides of the mobile home so that each rim joist has half as many holes as it would if all holes were drilled on the same side.

Sometimes a combination of techniques is required or desirable to achieve optimum results. Whichever way it is accomplished, undercarriage insulation is a valuable weatherization measure which will yield client benefits of both increased comfort and decreased utility costs.

SECTION 13

UNDERCARRIAGE INSULATION STANDARDS

1. RECOMMENDED INSTALLATION METHODS
   - All Mobiles
     - Belly injection through the bellyboard (rodent barrier) recommended.
     - Rim joist injection
       - Injection through ends or sides of mobile home acceptable.
       - All interior areas <u>not</u> accessible from the outside perimeter shall be accessed through the belly.
     - Hole size and spacing shall be in conformance with Item 8.

2. PROHIBITED INSTALLATION METHODS
   - All Mobiles
     - Rigid or flexible insulation shall <u>not</u> be attached under the bellyboard.

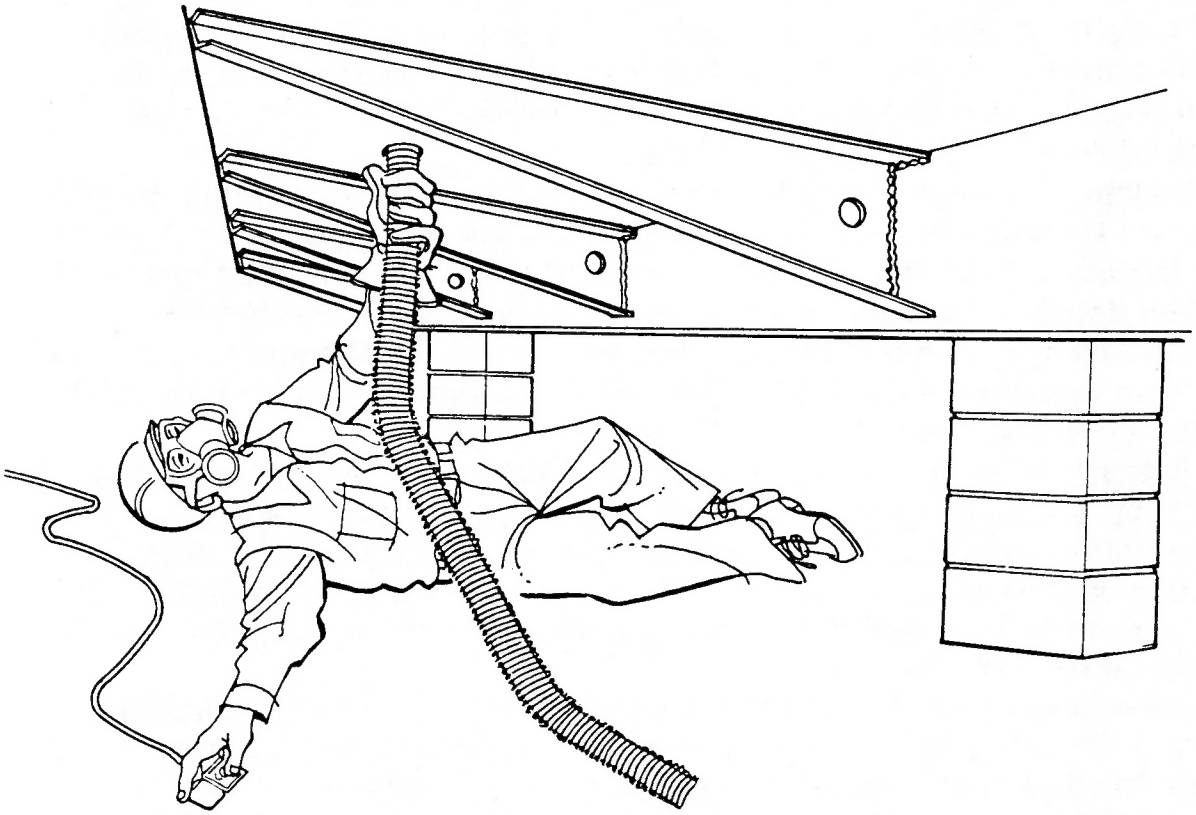

3. RECOMMENDED MATERIALS
   - Mineral Fiber
     - Loose Fill Fiberglass
       - Conformance to ASTM C764-88.
   - Sealing Materials
     - Caulking, sealants, and tapes:
       - As specified in Sections 2, 3, and 4.

4. R-VALUES OF ADDED INSULATION
   - All Undercarriage Insulation
     - R-11 minimum.
     - R-19 recommended.
     - Variable R-values from R-11 to R-30 in a single cavity fill allowed.

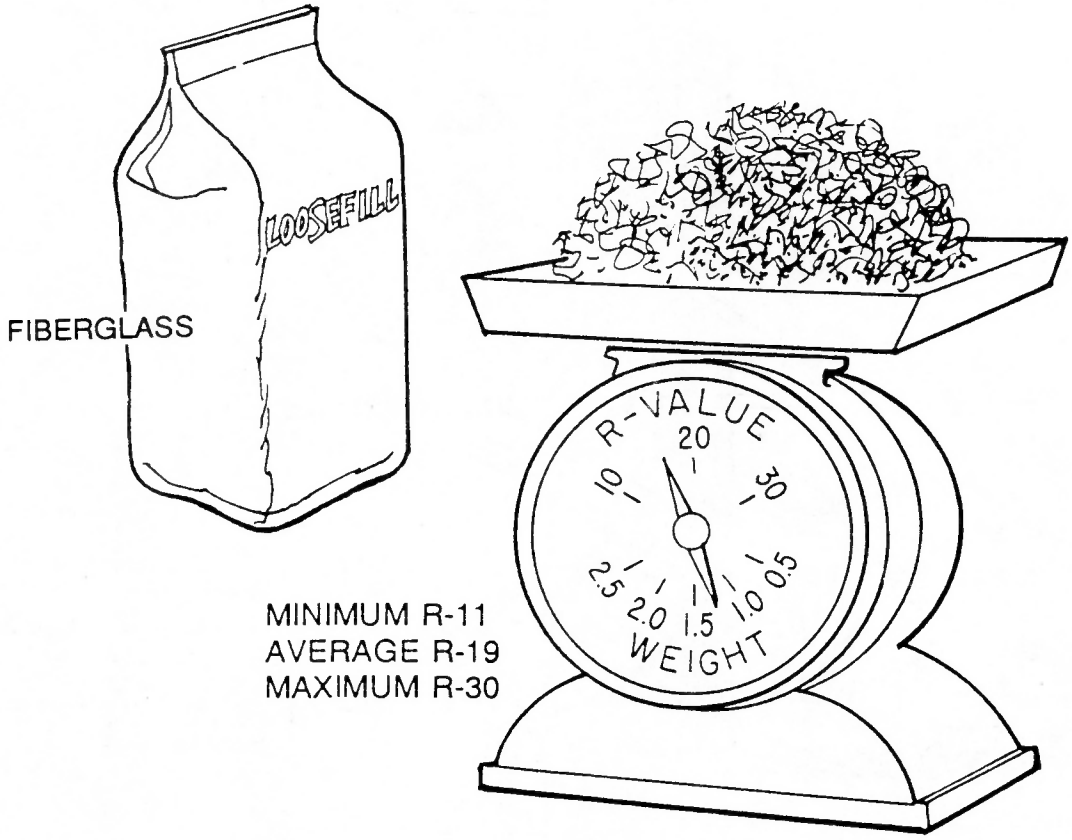

5. PRE-INSTALLATION ANALYSIS
   - Undercarriage Inspection
     - Duct system shall be analyzed by interior inspection with light and mirror through the register openings.
     - Undercarriage cavities shall be inspected through openings made in the bellyboard.
   - Inspection Holes in Bellyboard
     - Holes shall be large enough to facilitate full visual inspection.
       - Recommended sizes:
         - 14" x 14" centered on a joist to access two adjacent cavities.
         - 6" x 6" cut between joists to access one cavity.
     - Holes shall be sized and located for use later as fill tube access.

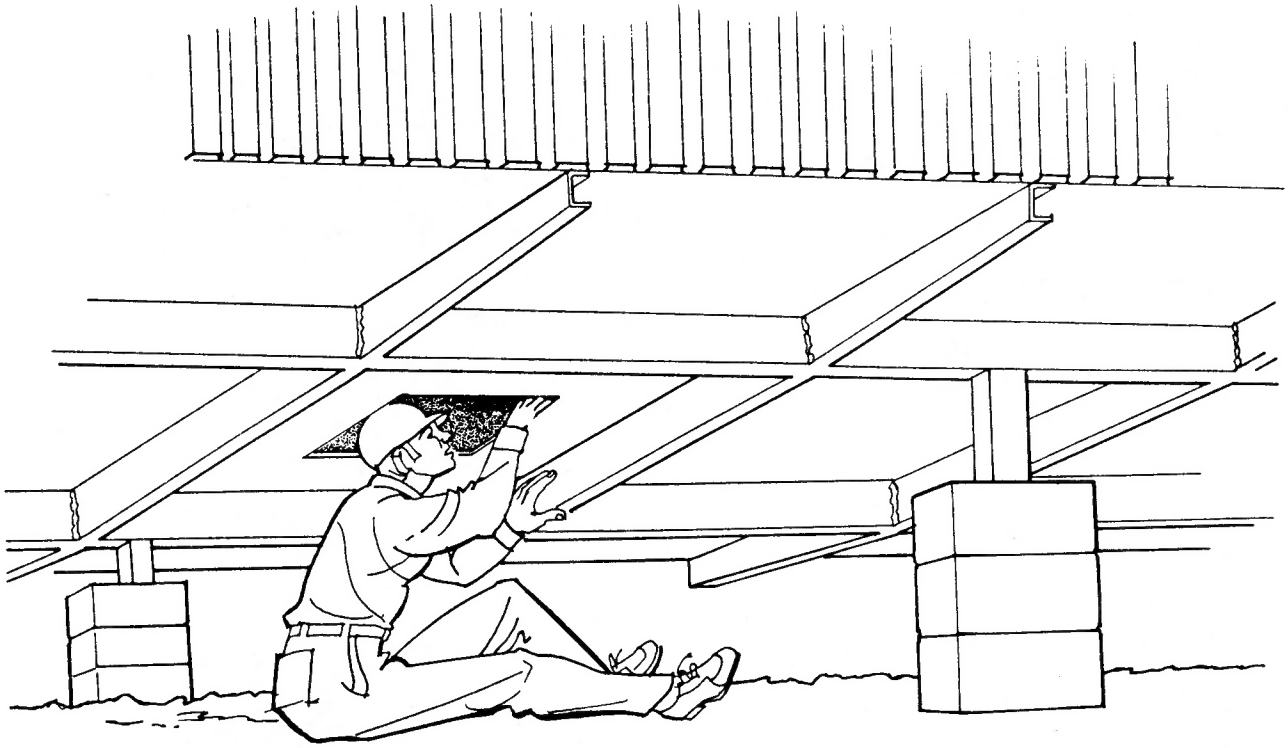

6. PRE-INSTALLATION REQUIREMENTS

- All Mobile Homes
  - Preparatory repair work, at a minimum, shall include:
    - Existing belly return shall be blocked off and sealed, and a replacement return system shall be installed in conformance with Section 3.
    - Metal separations and other duct system leaks shall be repaired in conformance with Section 3.
    - All plumbing leaks, both supply and waste, shall be repaired.
    - Exposed wiring and other electrical hazards shall be repaired.
    - All damaged or deteriorated sections of bellyboard shall be repaired in conformance with Item 10.
    - All significant holes in the bellyboard shall be repaired.
    - Water pipes shall <u>not</u> be isolated from the warm side of the added insulation.
    - Any combustion air opening located in the floor of an appliance enclosure shall be ducted through the bellyboard if the cavity is to be insulated.
    - Crawl space shall be properly ventilated per Item 14.

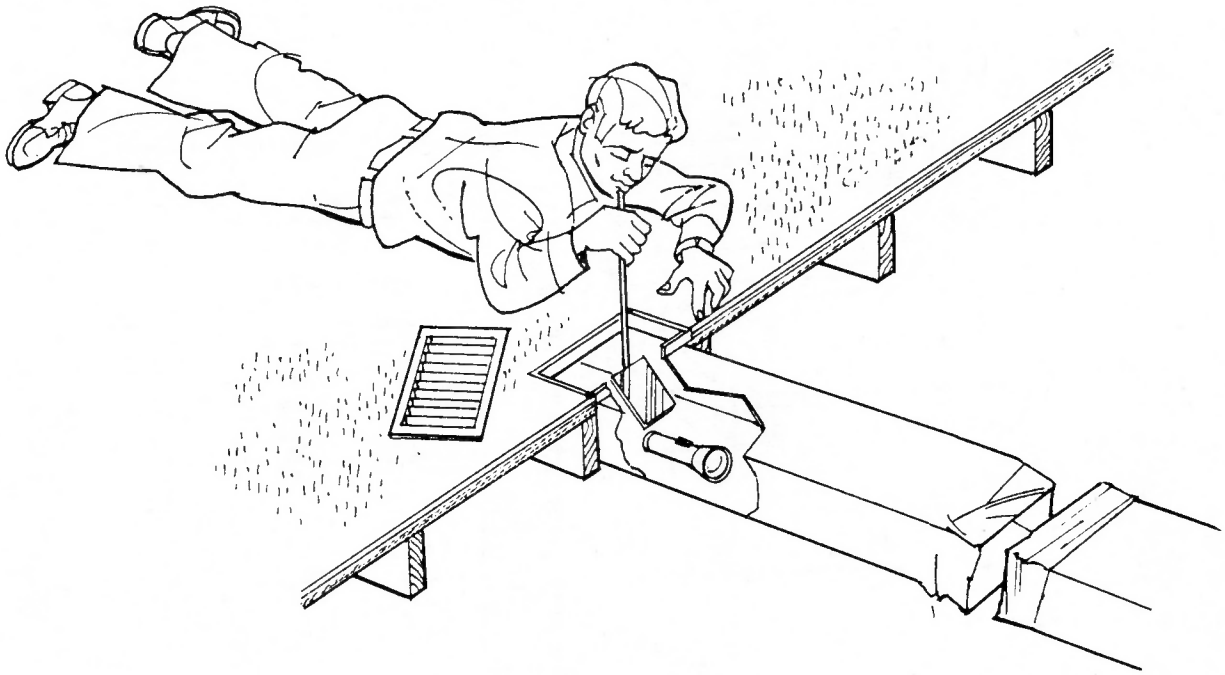

7. INSTALLATION REQUIREMENTS

- Coverage
  - All areas <u>not</u> occupied by ducts, plenums, or other obstructions shall be insulated.
  - All jurisdictional regulations restricting placement of insulation in cavities containing aluminum wiring shall be observed.
  - R-value shall be as prescribed in Item 4.
  - The cavity beneath an appliance enclosure which has combustion air venting in the floor shall <u>not</u> be insulated unless the venting is ducted through the bellyboard.
- Method of Access
  - Bellyboard penetration:
    - Is preferred in all cases.
    - Is required to insulate all interior areas <u>not</u> accessible through the rim joists.

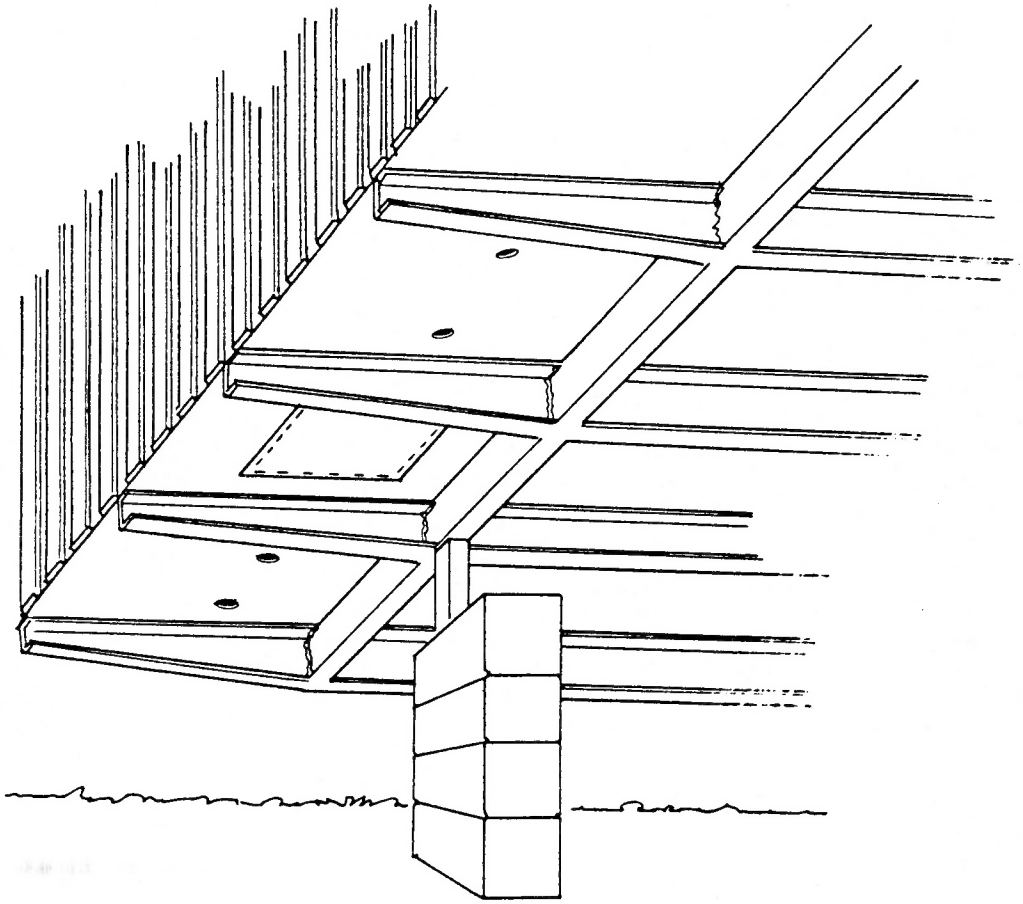

7. INSTALLATION REQUIREMENTS (continued)
   - Method of Access (continued)
     - Rim joist penetration:
       - Is acceptable when joist size and condition allow for safe and proper installation.
       - May be used to insulate joist cavities or portions of cavities which have unobstructed access from the outside perimeter.
   - Access Selection
     - Penetration points shall be those which are most feasible.
     - A combination of belly and joist penetrations may be used as needed to achieve optimum results.

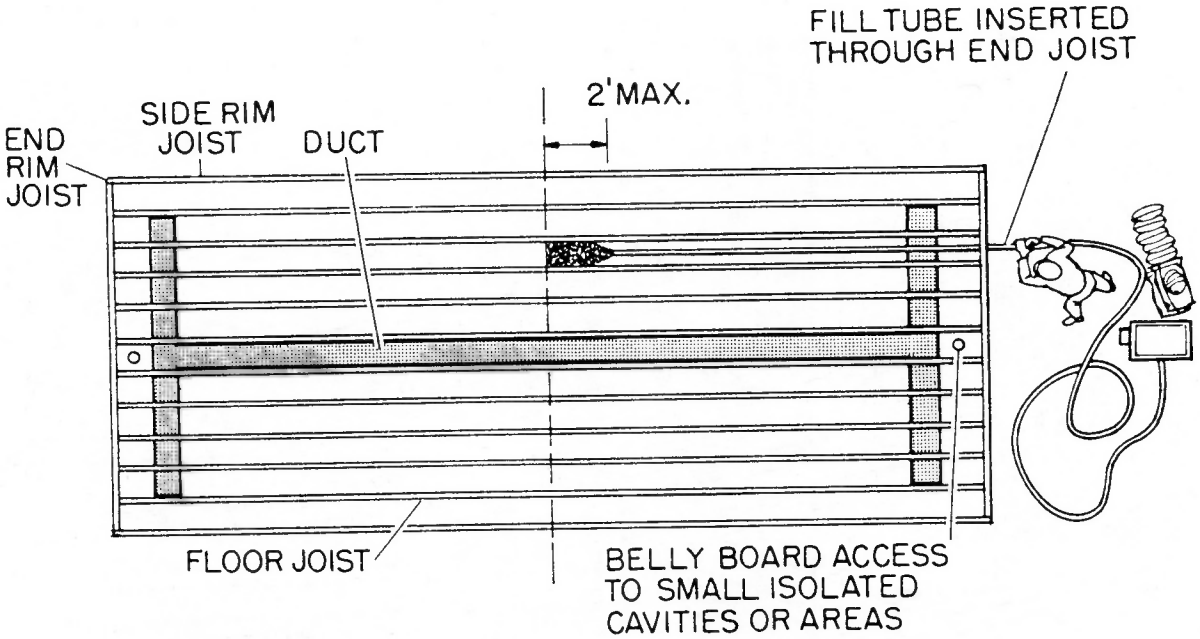

8. BELLY INJECTION ACCESS

- Access Holes
  - Holes cut for inspection purposes shall also be used for fill tube.
  - Existing damage holes shall be used for fill tube access when feasible.
  - Additional penetrations shall be made, as needed, to achieve complete coverage.
- Hole Spacing
  - Holes shall be spaced to accommodate the directional nozzle or fill tube utilized.
    - Maximum insulation travel beyond fill tube or nozzle shall be 2'.
- Hole Size
  - Holes shall be of sufficient size to properly accommodate the directional nozzle and/or fill tube utilized.

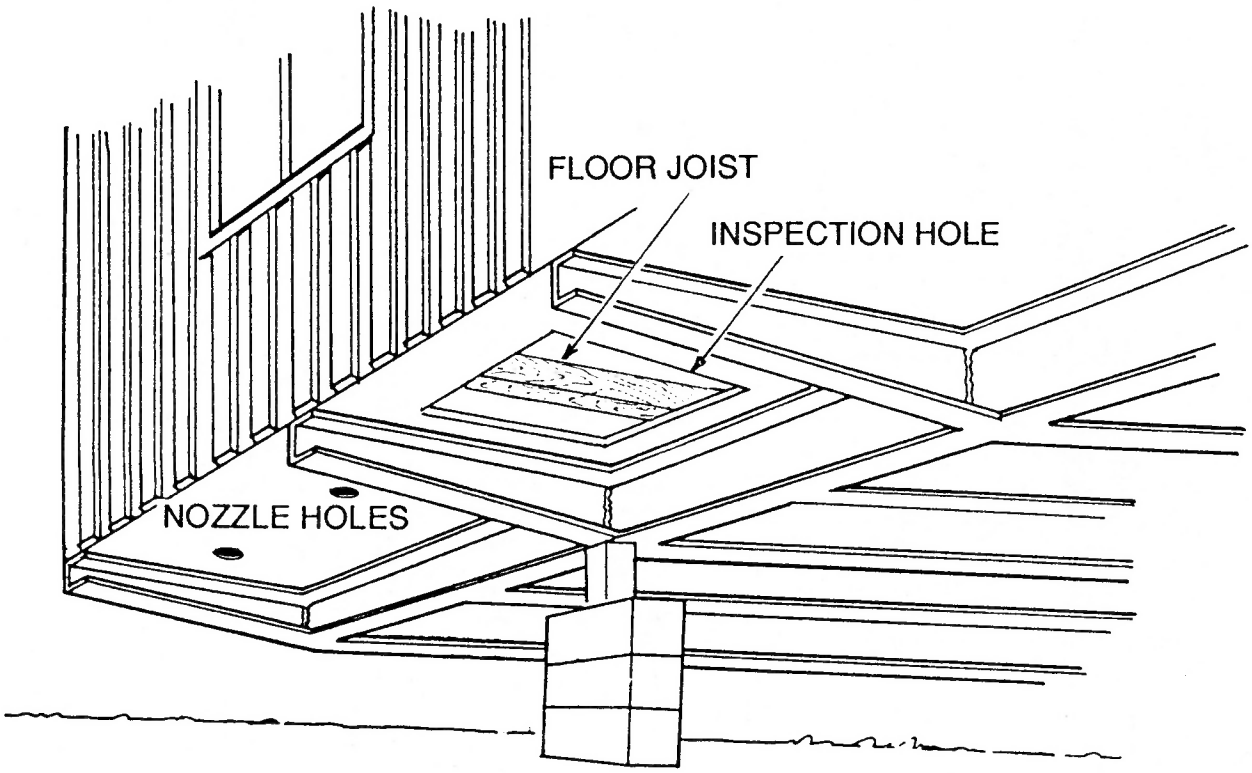

9. RIM JOIST INJECTION ACCESS

- Access to Rim Joists
  - Bottom wall trim shall be removed to expose the rim joist.
  - Exterior siding may be unfastened and carefully pulled back only if necessary.
  - Rim joist access shall be considered <u>not</u> feasible if it will result in visible damage to the siding.
- Hole Location
  - End and side joists
    - One hole shall be drilled for each floor joist cavity.
    - Holes shall be located as close as possible to the vertical center of the rim joist to minimize structural weakening.
    - Care shall be exercised in hole placement to avoid damage to plumbing and electrical lines attached or adjacent to the rim joist.

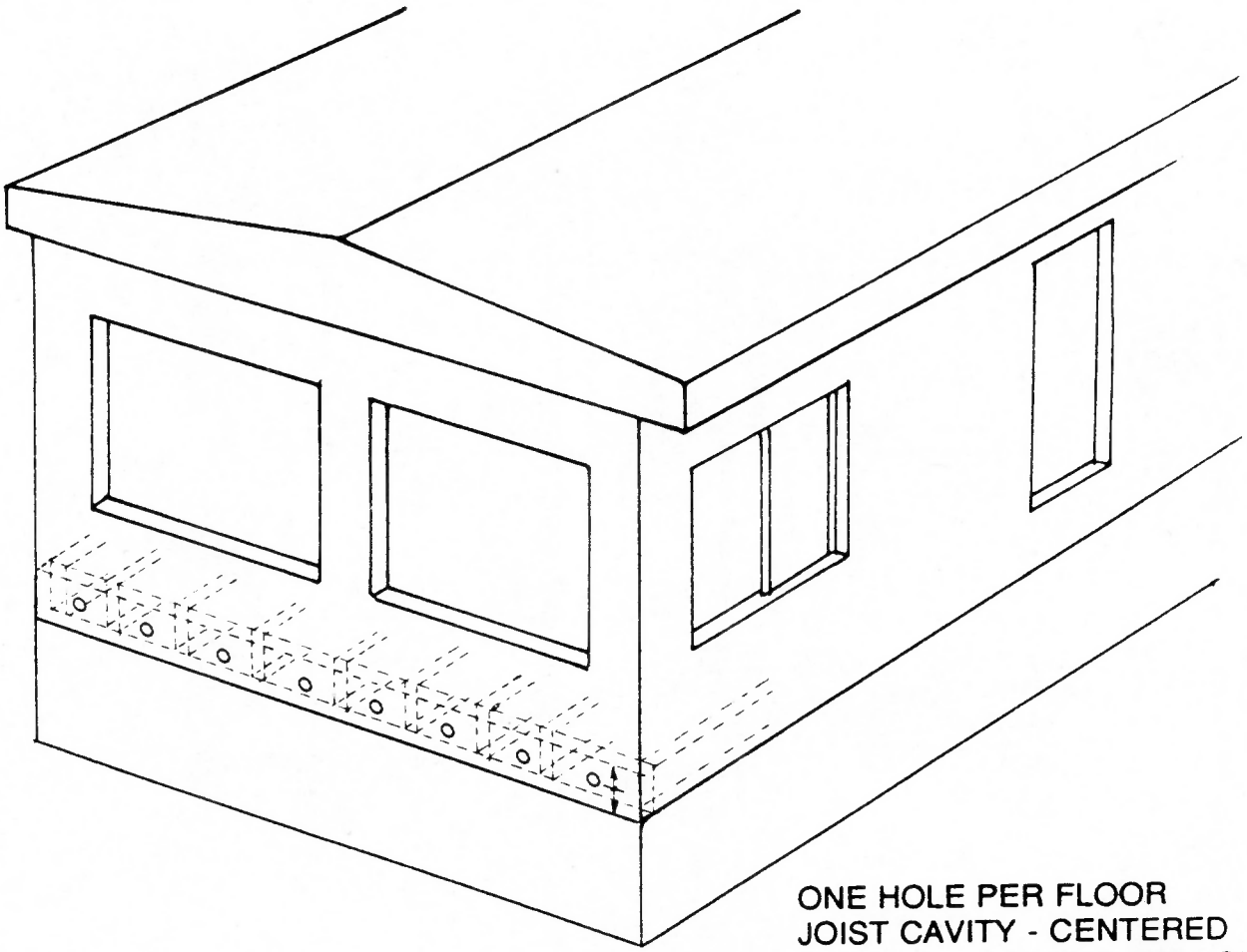

ONE HOLE PER FLOOR JOIST CAVITY - CENTERED VERTICALLY IN THE RIM JOIST

9. **RIM JOIST INJECTION ACCESS (continued)**
   - **Hole Location (continued)**
     - **Side rim Joists**
       - **Adjacent joist cavities shall be accessed alternately from opposite sides of the mobile home, as feasible, to minimize the number of holes in each rim joist.**
   - **Hole Size**
     - **Holes shall <u>not</u> exceed the following limitations:**

Joist Size	Maximum Hole Size
2" x 8"	2 1/2"
2" x 6"	2"
2" x 4"	Not allowed.

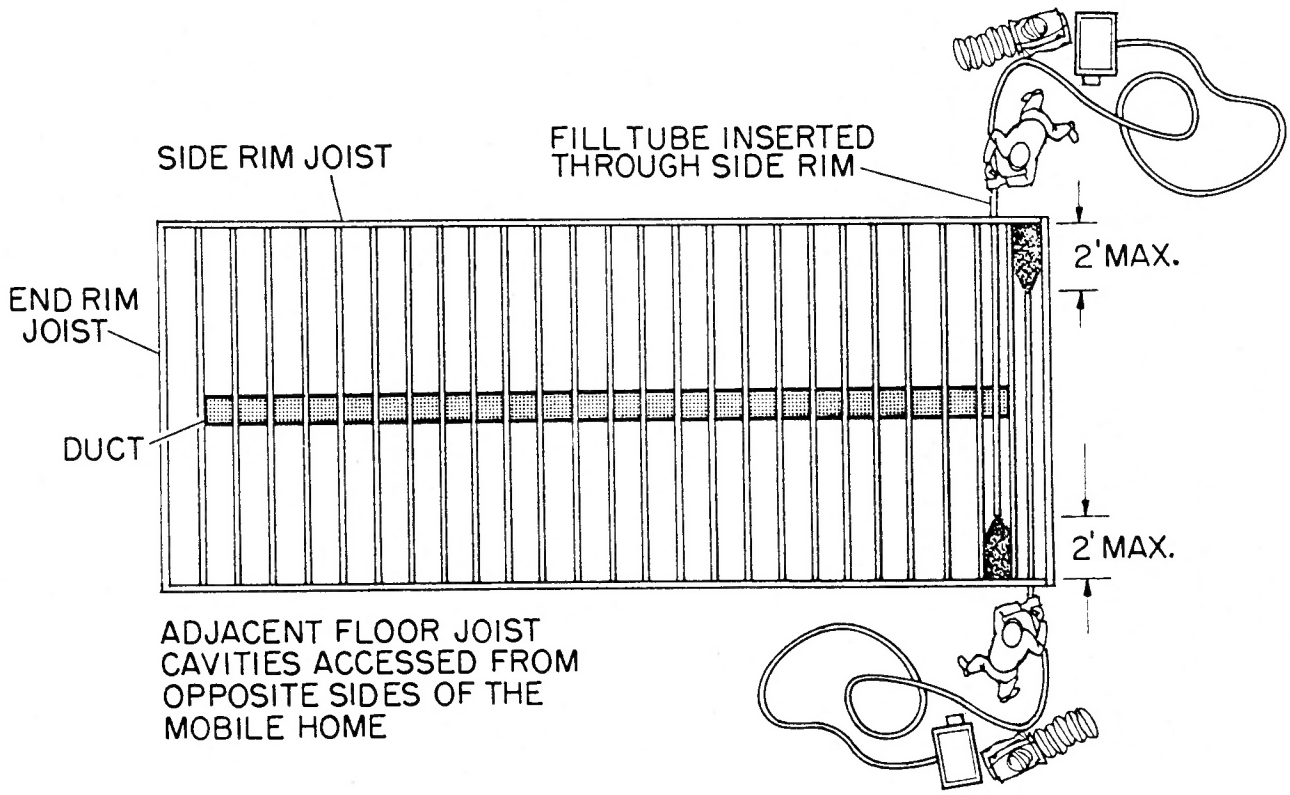

10. NOZZLE SIZE AND TYPE
- All Methods
  - Nozzle and fill tube diameter
    - 2" recommended.
    - 1 1/2" minimum inside diameter.
- Belly Injection
  - Flexible fill tube shall be no more than 2' shorter than the length of the cavity being filled.
  - Directional nozzle shall access a maximum of 2' of cavity depth in each direction.
- Rim Joist Injection
  - Rigid or flexible fill tube shall be no more than 2' shorter than the length of the cavity being filled.

11. BLOWER CONTROLS
- All Undercarriage Insulation
  - Installer shall be equipped with a remote control switch to control the blowing machine.

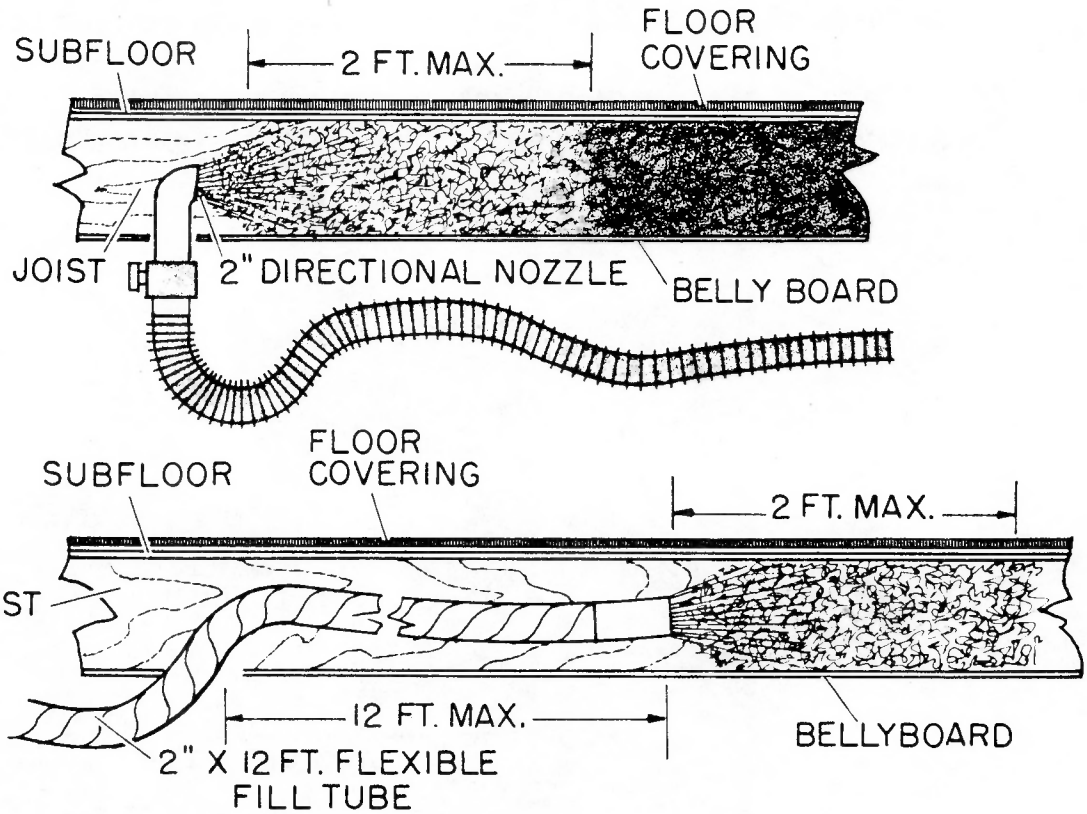

12. HOLE REPAIR

- Rim Joists
  - Solid wood plugs shall be installed in all fill holes.
  - Plugs shall be secured with exterior-rated glue or sealant.
- Bellyboard (Rigid or Flexible Rodent Barrier)
  - All holes shall be repaired with material equivalent or superior to the existing bellyboard.
  - All patches shall be securely and permanently attached and create a complete and permanent seal.
  - Patches in Flexible Rodent Barrier
    - All patches shall be secured and sealed with acoustical caulk or other suitable adhesive sealant.
    - Patches shall be additionally secured mechanically with one or more of the following:
      - Fasteners penetrating the wooden joists a minimum of 1/2" and spaced a maximum of 4" OC.
      - Stitch staples, or equivalent, spaced appropriately to permanently and securely attach the patch directly to the existing bellyboard.
      - Wooden strips attached with screws into floor joists, or wedged above adjacent girders, or otherwise permanently secured.
    - Butyl tape or other sealant shall be placed around the perimeter, as needed, to assure a complete and permanent seal.

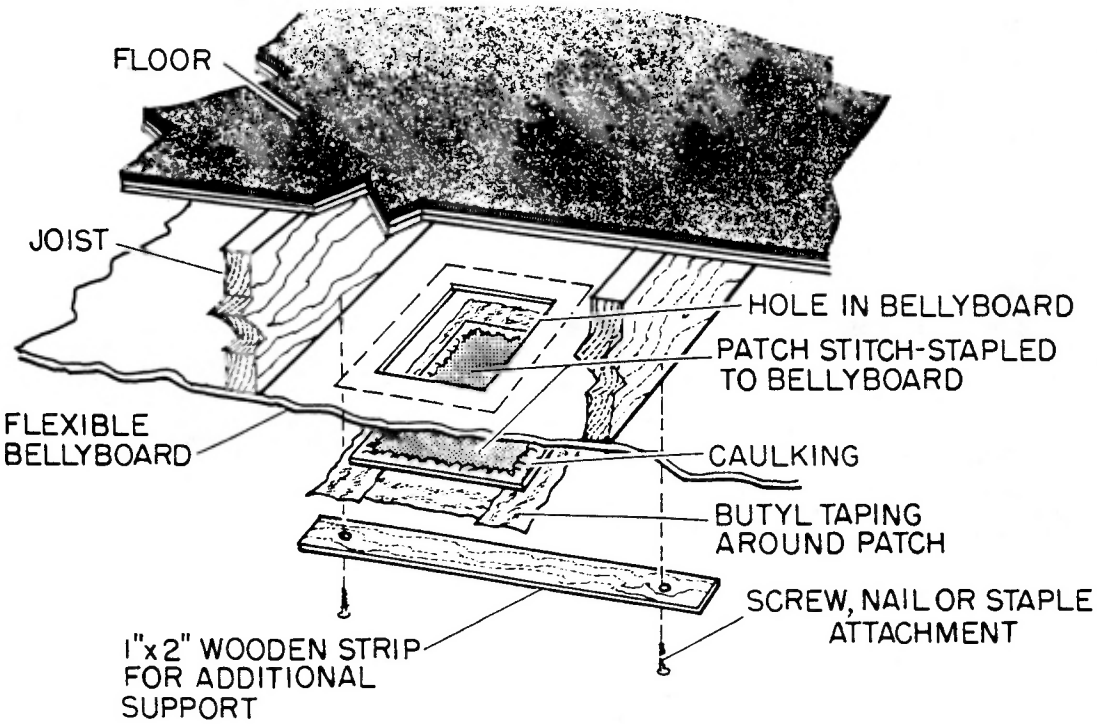

12. HOLE REPAIR (continued)
- Bellyboard (continued)
  - Patches in Rigid Rodent Barrier
    - Patches shall be sealed with suitable caulk and secured mechanically.
    - Recommended mechanical attachments include:
      - Fasteners penetrating the wooden joists a minimum of 3/4" and spaced a maximum of 6" OC.
      - Wooden strip supports spanning beyond the patch and secured mechanically into the framework above.
      - Wedging the patching material between the existing bellyboard and the metal framing of the undercarriage.
      - Fasteners which penetrate only the existing bellyboard, for small patches in high density material.
      - A combination of methods which will provide a stable, permanent repair.

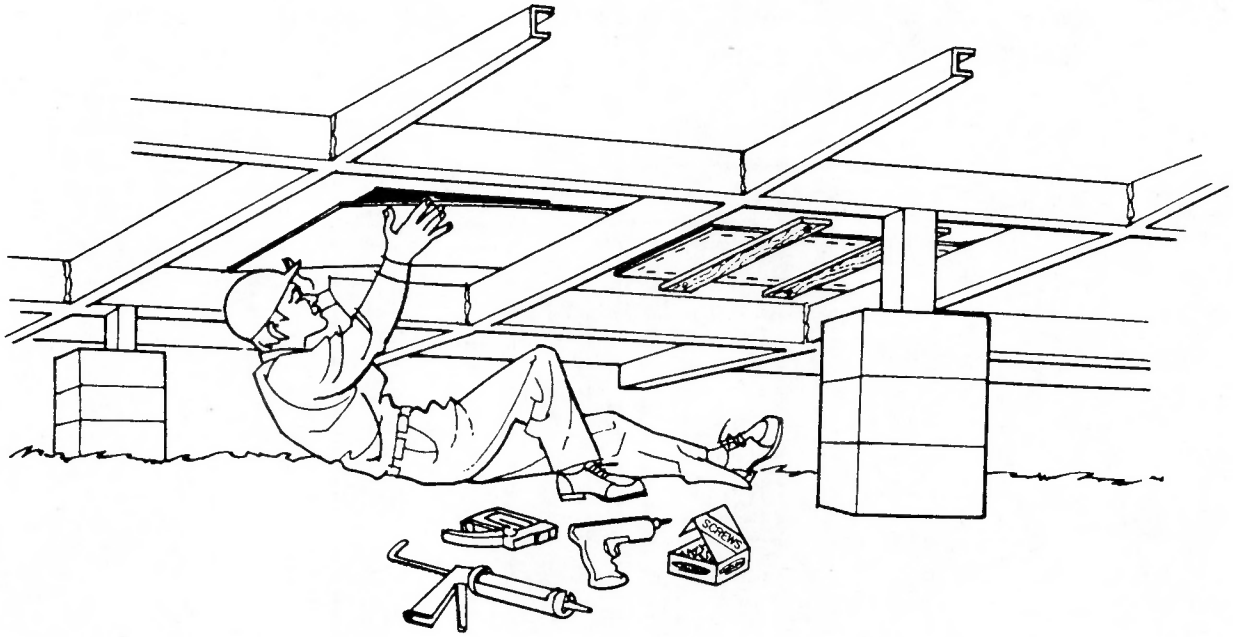

13. GROUND COVER

- All Mobile Homes
  - Moisture barrier recommended:
    - When properly installed skirting is in place around the entire perimeter.
    - When there is no danger of surface pooling of water due to high water table or poor drainage.
    - After all plumbing leaks have been repaired.
  - Material requirement
    - Minimum 6 mil black polyethylene or equivalent new, or 4 mil. existing.
    - Fiber reinforced material recommended.
  - Installation requirements
    - All joints shall overlap a minimum of 12".
    - Flaps at piers shall extend a minimum of 6" up the sides of the support foundation.
    - Extremities shall extend a minimum of 6" up the inside of the existing skirting.
    - Edge attachment to existing skirting with adhesive caulk or mechanical means recommended.
    - Overlaps should be secured with stitch staples and/or adhesive, or with material placed on top to weigh down the upper flap.

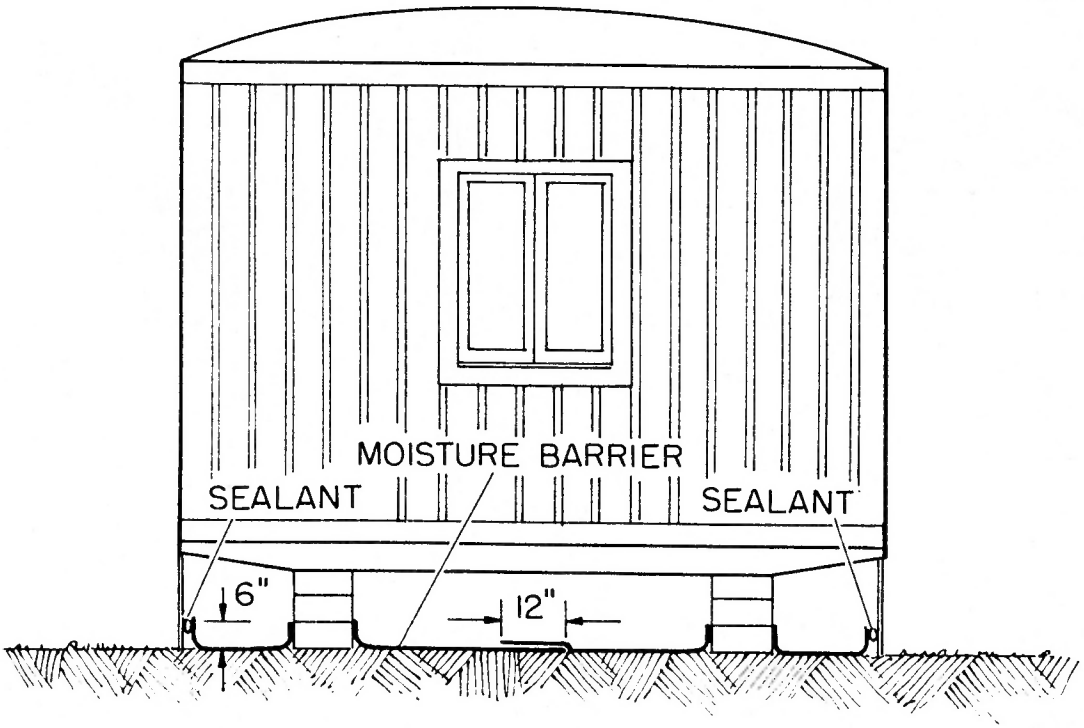

14. CRAWL SPACE VENTILATION

- Skirted Mobile Home
  - Crawl space must be present before installing insulation.
  - Openings in the skirting shall provide 1 sq. ft. of venting for each 150 sq. ft. of enclosed area.
  - Venting ratio may be reduced to 1/300 when ground is covered with an approved ground cover in conformance with Item 13.
  - Vents shall be:
    - Non-operable unless ground cover is present.
    - Located as close to corners as practical.
    - Distributed evenly along the length of at least two opposite sides.
    - Covered with maximum 1/4" corrosion-resistant mesh.

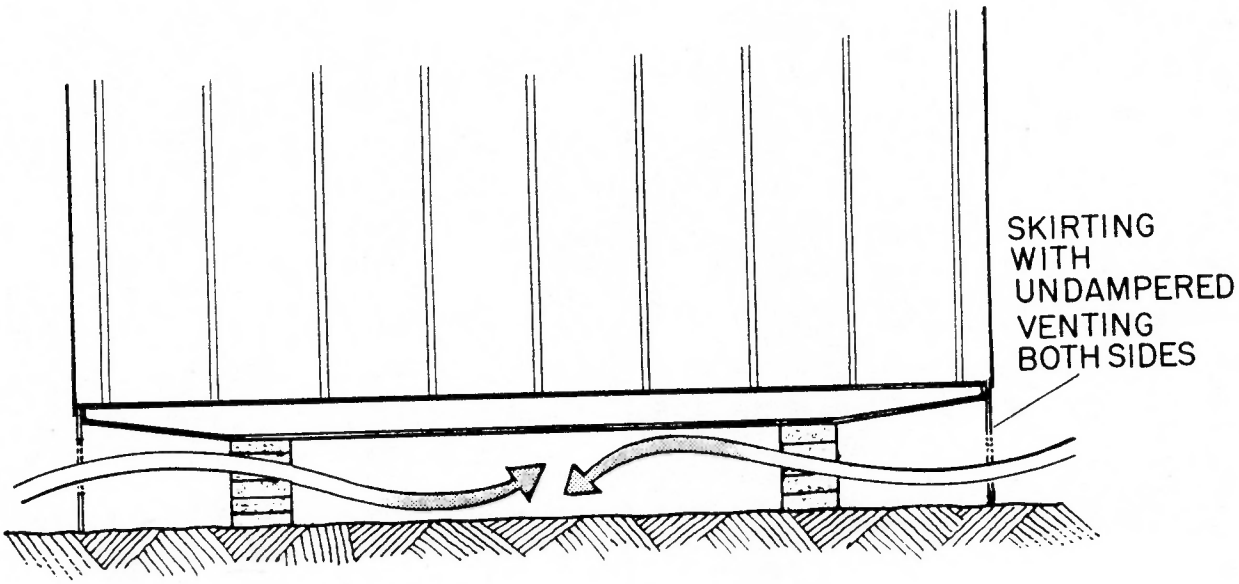

NONFEASIBILITY CRITERIA FOR UNDERCARRIAGE INSULATION

1. Deemed <u>not</u> cost effective by audit.

2. Bellyboard <u>not</u> capable of supporting weight of added insulation and blowing pressure.

3. Undercarriage <u>not</u> adequately accessible for inspection and repair (crawl space less than 18").

4. Hazardous insect infestation present.

5. Excessive ground moisture (standing water or mud) present.

6. Sewage waste on ground or other unsanitary conditions posing health and safety hazards.

SECTION 14

WOOD BURNING SPACE HEATERS

PREFACE

Wood burning stoves are very popular in the colder rural areas. They can provide considerable comfort and savings benefits. However, great care must be exercised when choosing and installing one in a mobile home.

Of paramount importance is the selection of a "listed" wood stove which is approved for mobile home installation. These stoves bring combustion air in from outdoors through a duct in the floor, and they typically have reduced clearances to combustibles. This is important in a mobile home because space is limited and furniture may need to be located close to the heater.

Proper installation is an absolute must. The connector pipe, ceiling support system, class "A" chimney pipe, and all related components must be installed exactly as specified by the manufacturer. Failure to use the proper parts, lack of adequate airspace at ceiling and roof penetrations, inadequate clearance from an evaporative cooler, or omission of the spark arrestor could all jeopardize the safety of the occupants.

Properly selected and correctly installed, a good quality mobile home wood stove can be an excellent long term investment in energy savings and client comfort.

SECTION 14

WOOD BURNING SPACE HEATER STANDARDS

1. **HEATERS/CHIMNEYS/CONNECTORS**
   - **All Types**
     - **Only "listed" equipment shall be used.**
       - **UL listing or equivalent required.**
     - **All heaters shall bear permanently affixed labels which read:**
       - **"For use in mobile or manufactured homes."**
       - **"For use with solid fuel only."**
     - **Heaters <u>not</u> listed and labeled for mobile home installation shall <u>not</u> be used.**

2. **EMISSION STANDARDS**
   - **All Heaters**
     - **Shall meet EPA emission standards.**
     - **Shall comply with federal, state, and local codes.**

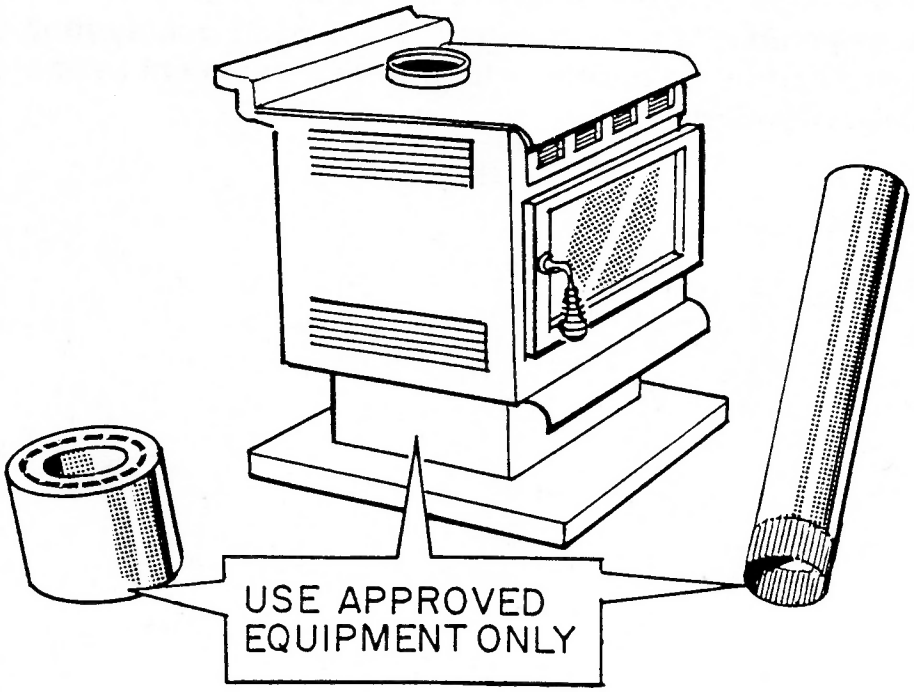

3. HEATER TYPES
- Recommended
  - Freestanding Heaters
    - Stoves designed to operate only with fire chamber door closed.
    - Wood, wood pellet, or coal burning units.
    - Radiant or convection models.
- <u>Not</u> Allowed
  - Units designed to operate with fire chamber door open.
  - Units without doors.

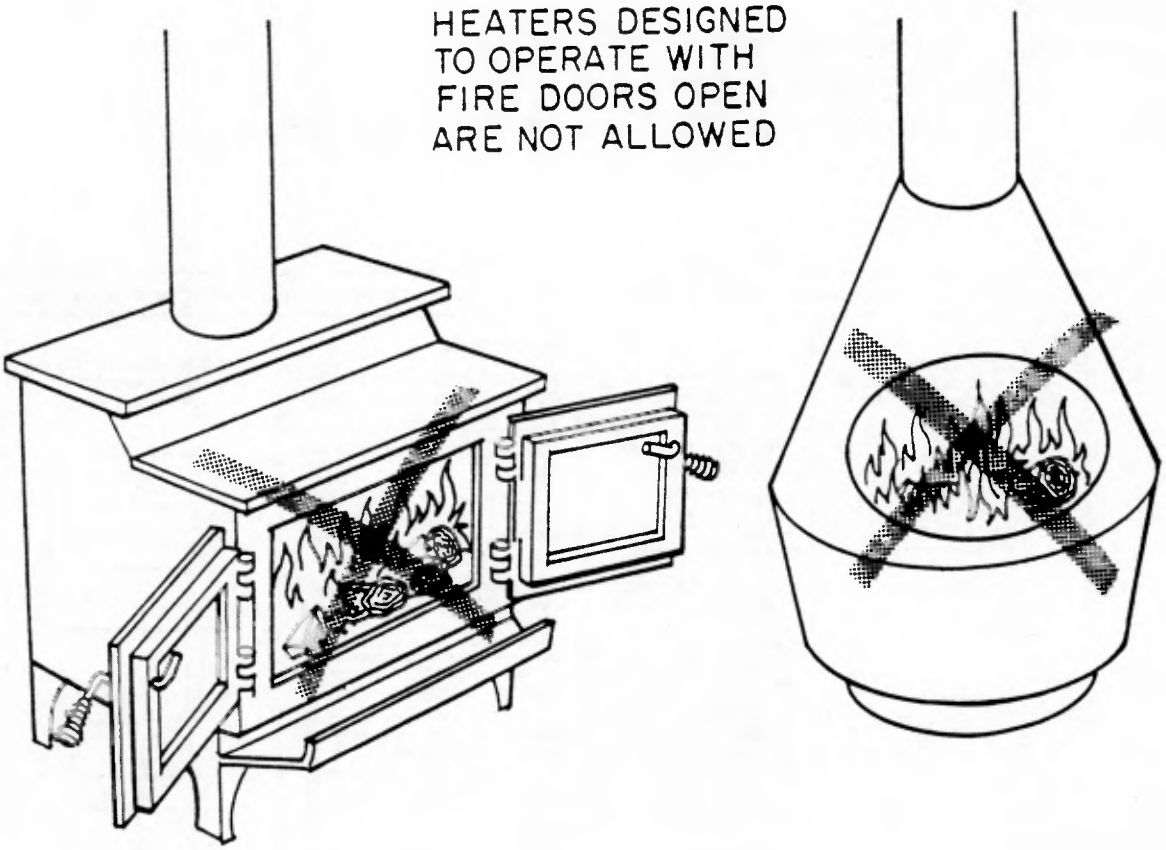

4. LABEL(S)
   - All Heaters
     - Shall have permanent factory label(s) in conformance with HUD regulations stating:
       - Required clearance to combustibles, including walls, ceiling, and floor.
       - Proper fuel.
       - Connector and chimney size and type.
       - Operation and safety information.
       - Floor protection requirements.
       - Wall/ceiling protection requirements.
     - When purchased by agency or contractor, unit shall bear temporary label(s) certifying conformance to EPA emission standards.

5. OWNER MANUALS
   - All Heaters
     - Instructional manuals:
       - Shall be left in the home.
       - Shall conform to CPSC and HUD regulations.

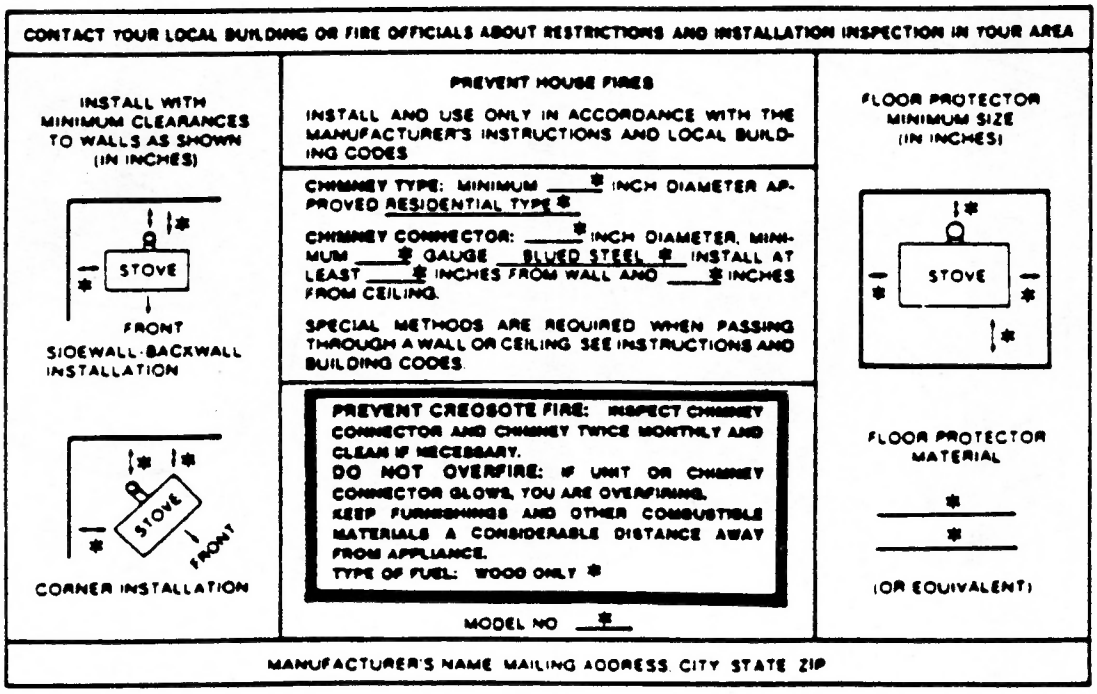

6. WARRANTY
   - All Heaters
     - Non-Electrical Parts
       - 3 year manufacturer's warranty.
     - Electrical Parts
       - 1 year manufacturer's warranty.

7. LOCATION
   - All Heaters
     - Heater shall be located in the living room or other central location.
     - Installation in bedrooms <u>not</u> allowed.

8. SIZING
   - Heaters
     - Oversizing <u>not</u> allowed.
     - Design heating load calculations recommended.
   - Mobile Homes
     - The space surrounding the installed heater shall be of sufficient size to assure proper clearances to combustibles and safe operation.
     - Double-wide or larger is the minimum recommended size mobile home for wood burning space heater installation.

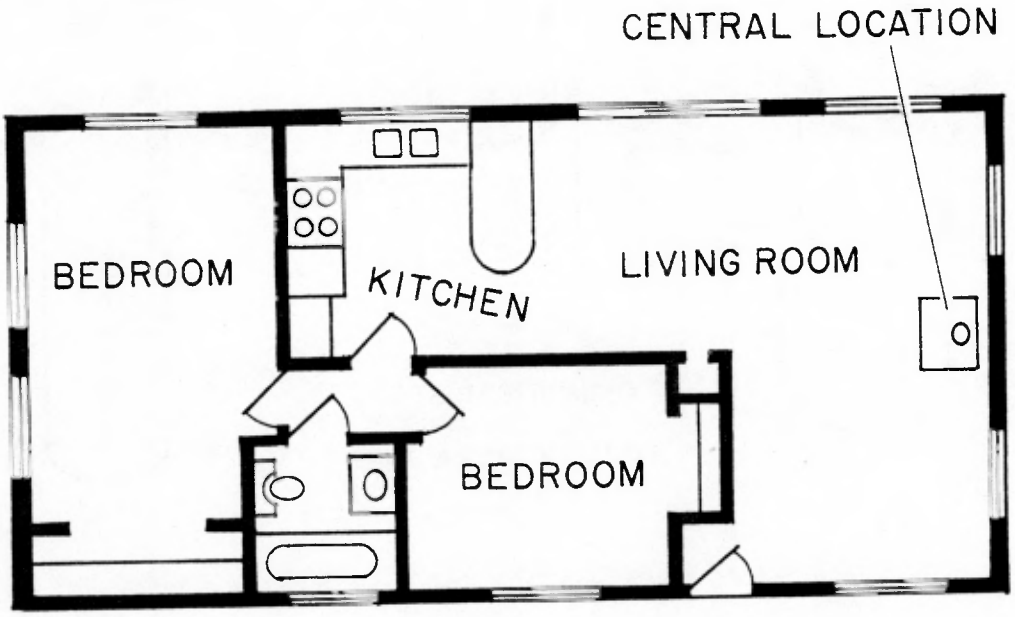

9. **INSTALLATION**
   - **All Heaters**
     - **The solid fuel heater, air intake assembly, hearth extension, and the chimney shall be installed in accordance with the terms of their listings and their manufacturer's instructions.**

10. **CHIMNEY AND COMPONENTS**
   - **All Installations**
     - **Only factory built listed "Class A" chimney components specified by the heater manufacturer shall be installed.**
     - **Manufacturer-approved listed ceiling support package shall be installed when connector is used.**
     - **Listed chimney cap and spark arrester specified by the manufacturer shall be installed.**

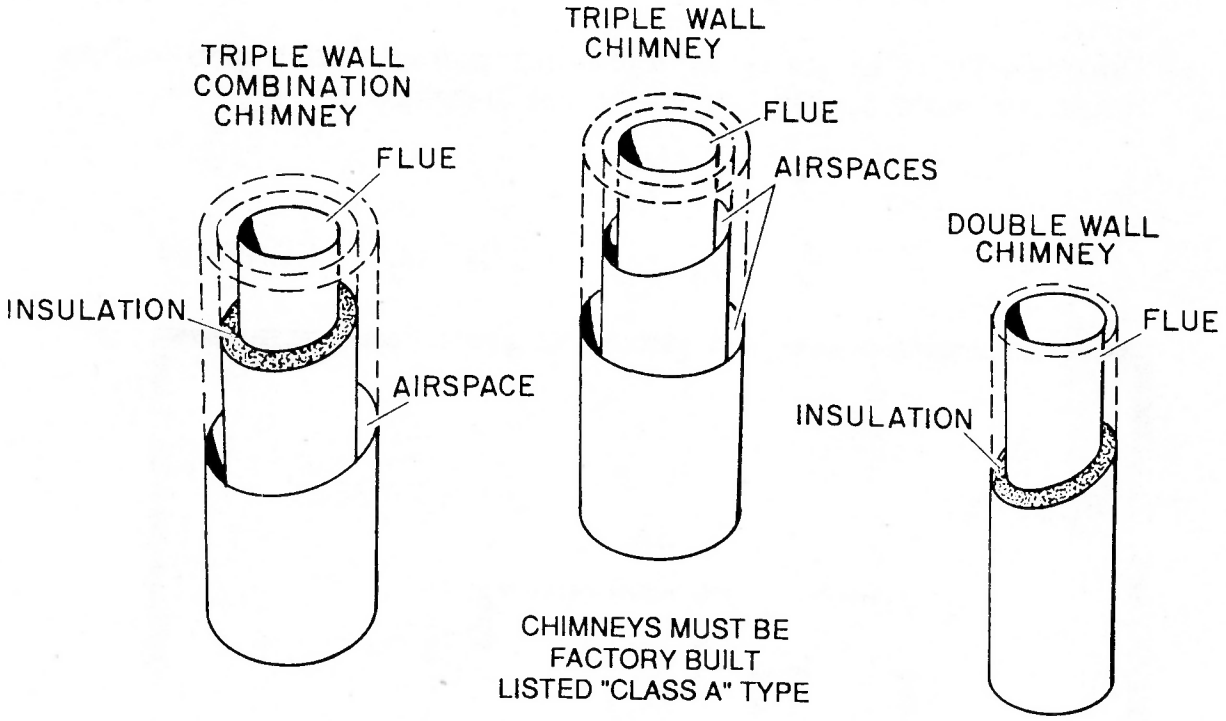

11. CONNECTOR TYPES
   - All Installations
     - Connectors and related components shall be:
       - Those specified by the heater manufacturer.
       - Factory built.
       - Laboratory listed.

12. CONNECTOR/CHIMNEY SIZING
   - All Installations
     - Connector shall be no smaller in diameter than the flue outlet.
     - Connector may be a maximum of 25% larger than the cross sectional area of flue outlet.

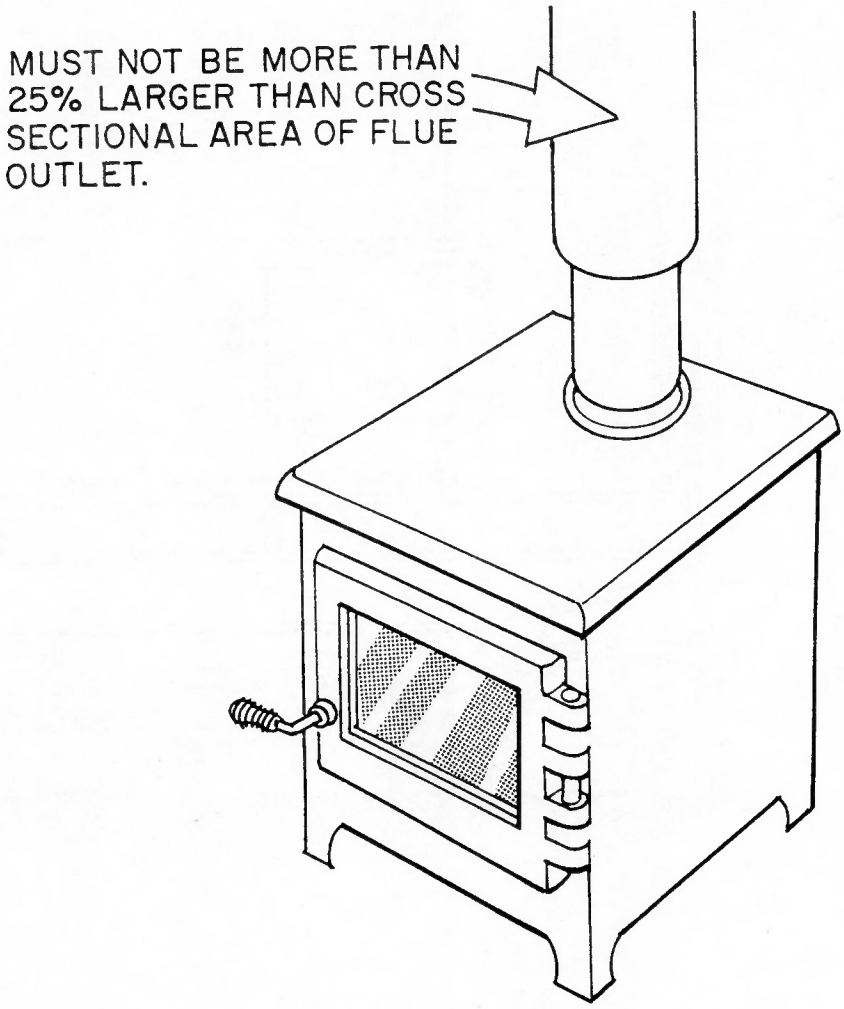

13. COMBUSTION AIR

- Source
  - Combustion air for all heaters shall come from outside the living space in conformance with HUD regulations.
  - Combustion air intakes shall be ducted through the envelope as specified by the manufacturer.
- Crawl Space Ventilation
  - Skirting shall be ventilated when the undercarriage area is the source of combustion air.
    - Undampered venting shall be installed as needed.
    - NFV area in the skirting shall be at least twice the NFV area of the air intake opening for the stove.
    - Vents shall be located on at least two opposite sides of the mobile home.

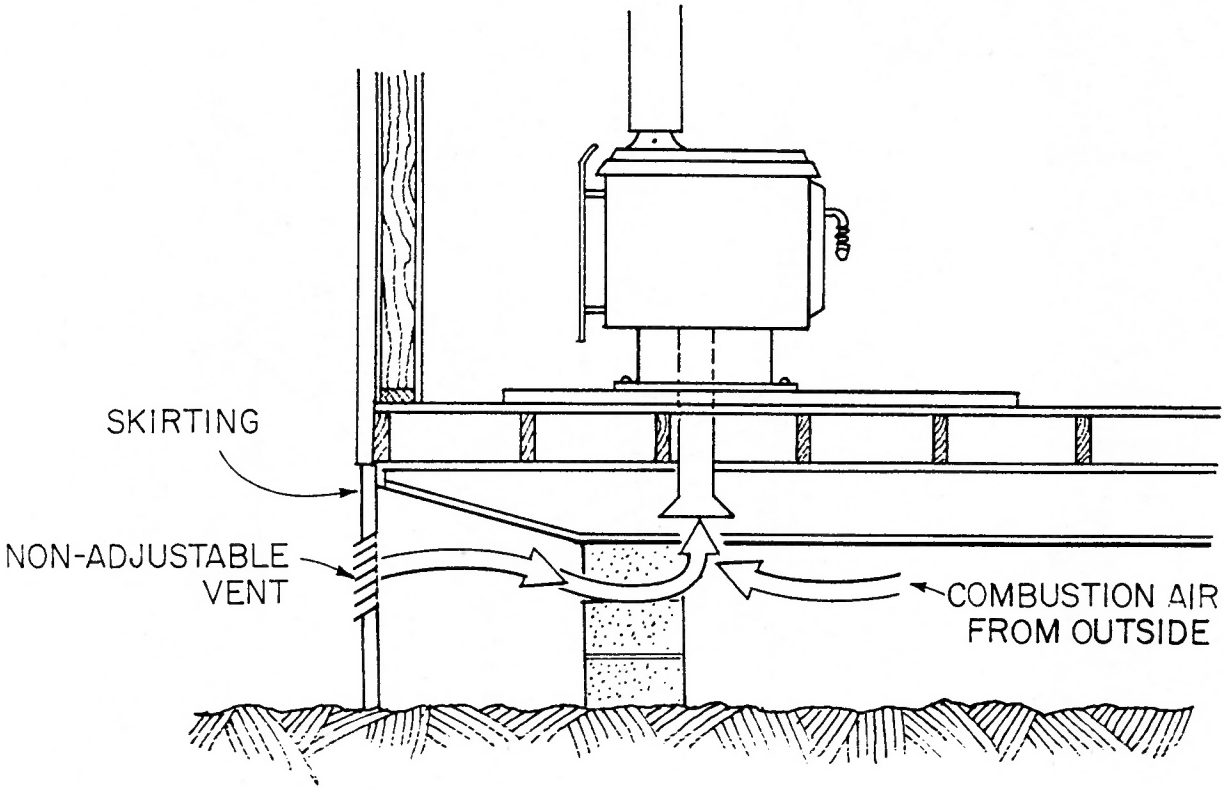

14. CLEARANCE FROM COMBUSTIBLES
- All Heaters, Connectors, and Chimneys
  - Manufacturer's listed clearance minimums shall be maintained.

15. CLEARANCE REDUCTION SYSTEMS
- All Heaters and Connectors
  - Only listed clearance reduction devices shall be used.
  - Heater installation shall conform to the listed clearance requirements.

16. FLOOR PROTECTION
- All Heaters
  - A listed floor protector shall be installed in conformance with manufacturer's instructions and HUD regulations.
    - Protection shall extend beyond the heater a distance equaling the <u>greater</u> of:
      - Manufacturer's instructions.
      - 16" beyond the front, and 8" beyond each side of the fire box opening.

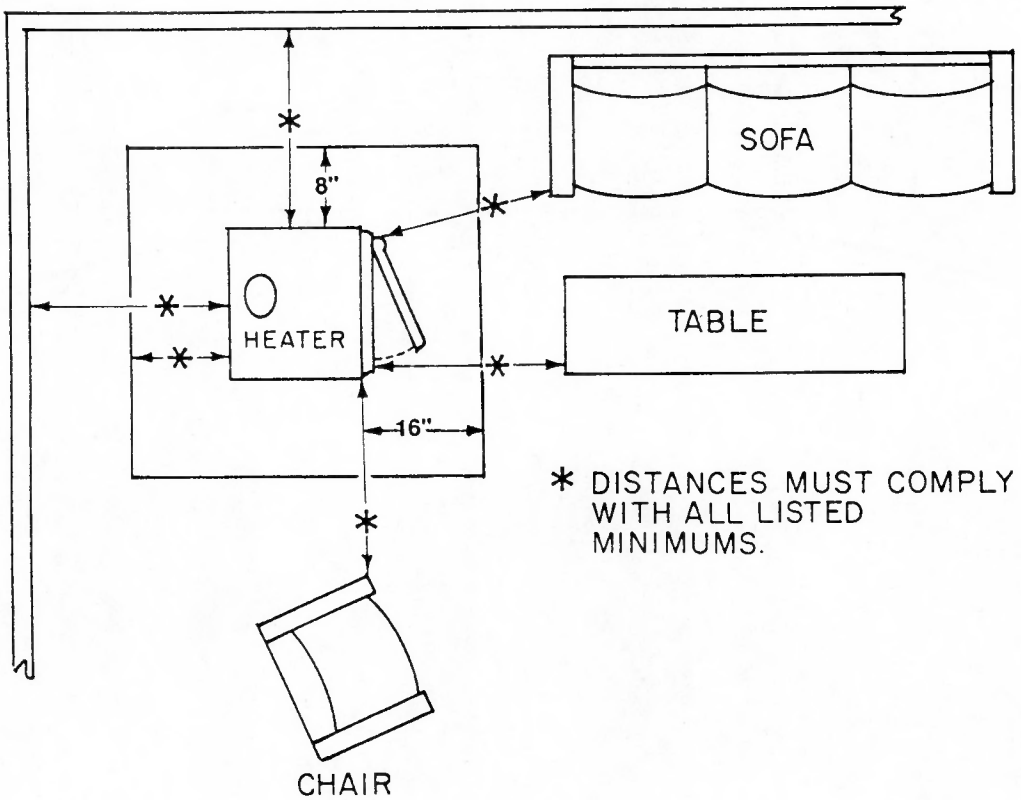

17. CHIMNEY INSTALLATION

- Chimney Height
  - The chimney shall extend at least:
    - 3' above the highest point of roof penetration.
    - 2' higher than any portion of a pitched roof, a wall, an evaporative cooler, or any other such object located within 10' of the chimney.
- Bracing
  - Chimneys extending more than 5' above roof at the highest point of penetration shall be braced in conformance with manufacturer's instructions.
- Cleaning and Removal
  - Installation shall allow for cleaning and for removal during moving of all portions of the chimney that exceed an elevation of 13.5' above ground level.

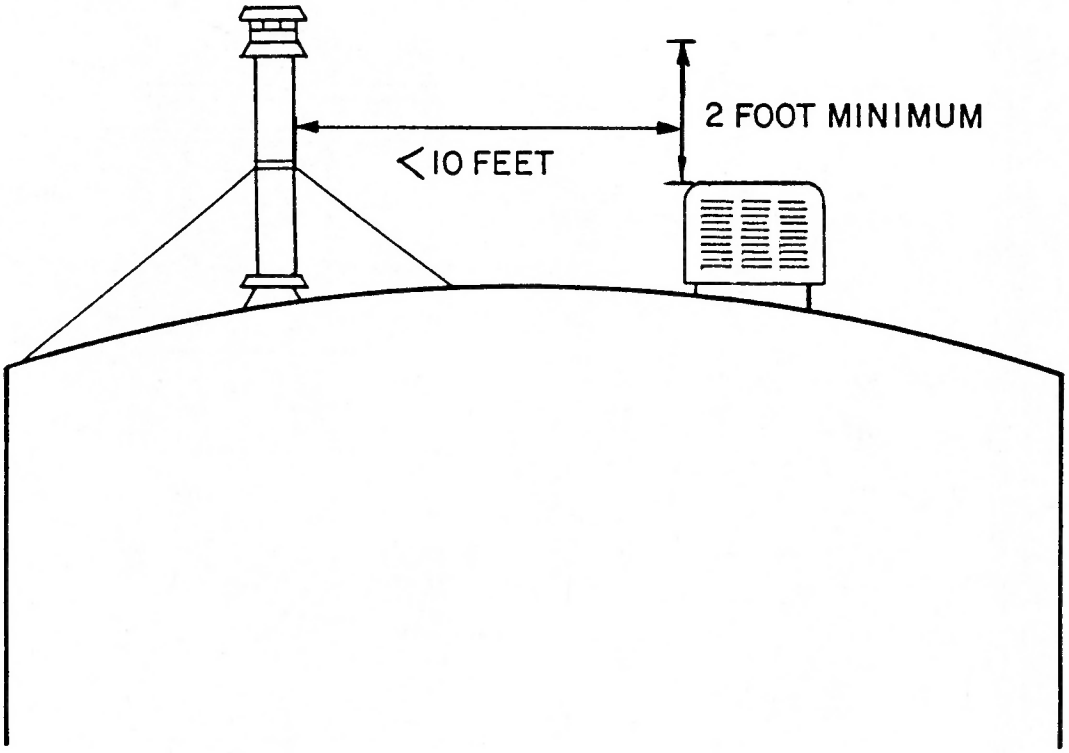

18. FLOOR ANCHORS
- Freestanding Stoves
  - All heaters
    - Shall be securely attached to the mobile home structure in conformance with heater manufacturer's instructions.

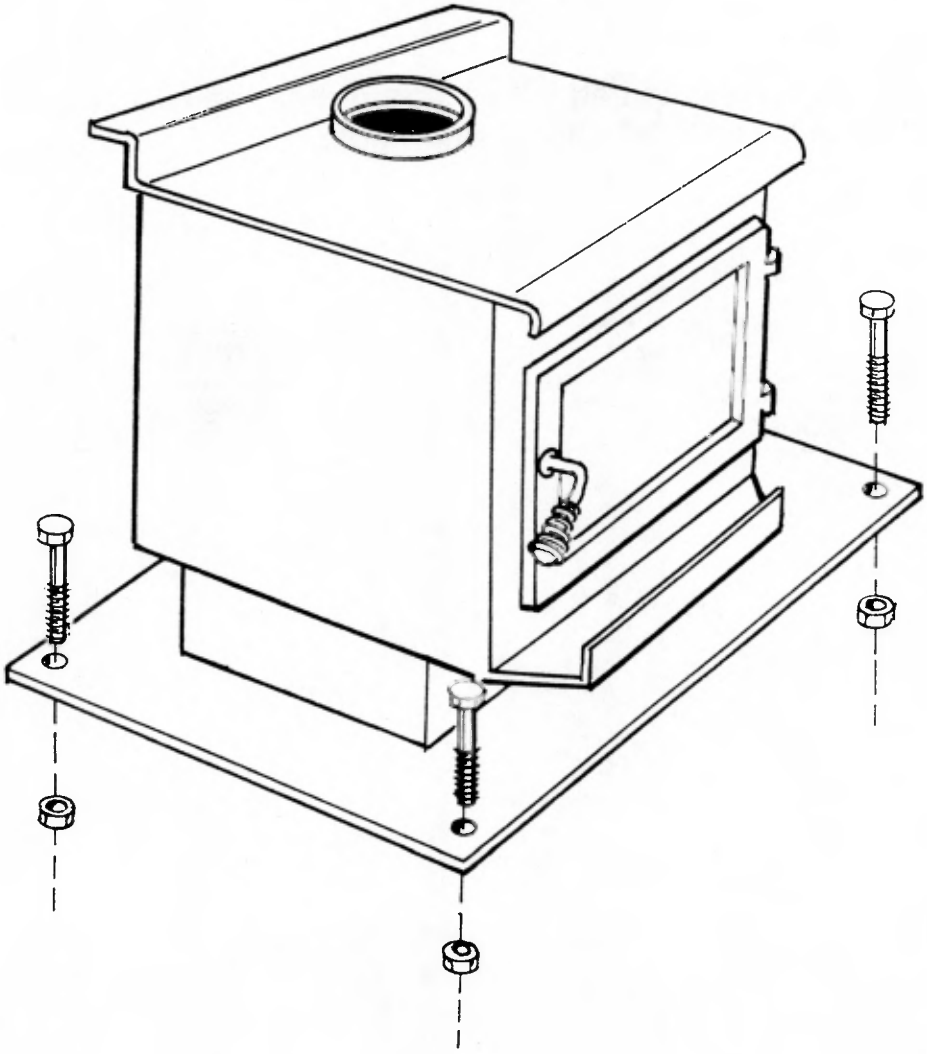

19. **MINIMUM WARRANTIES**
    - **Manufacturers**
        - **As prescribed in Item 6.**
    - **Installation Contractor**
        - **3 year warranty.**

20. **CONTRACTOR'S LICENSE**
    - **All installations shall be performed by licensed contractors.**
    - **License(s) required shall be determined by the authority having jurisdiction over mobile home alterations.**

21. **PERMITS**
    - **Permits shall be acquired when required by the authority having jurisdiction over mobile home alterations.**

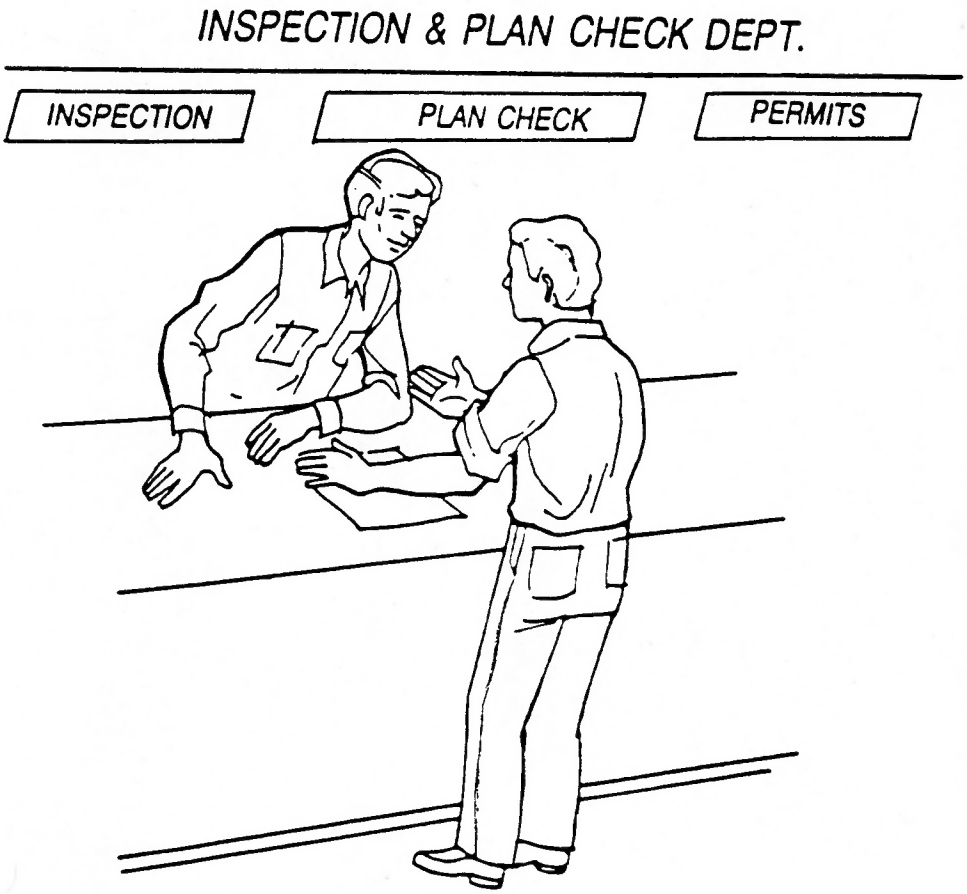

NONFEASIBILITY CRITERIA FOR WOOD BURNING SPACE HEATERS

1. Application <u>not</u> cost effective by audit.
2. Home too small for safe wood heater operation.
3. Natural gas service is already in place at the site.

SECTION 15

CENTRAL HVAC AND WALL/WINDOW AIR CONDITIONER FILTERS AND ALARMS

PREFACE

There are three important reasons for installing and maintaining filters:

1) To prevent the inside air conditioning coil (evaporator) from clogging.
2) To reduce dirt buildup inside the furnace air path and duct system.
3) To increase indoor air quality.

When the evaporator becomes clogged, the operating efficiency of the air conditioner decreases significantly. The unit works harder, runs longer, delivers less cool air, and uses more electricity. This translates into reduced client comfort and increased utility bills.

Dirt accumulation in the furnace and duct system produces airborne dust. This contributes to unhealthful indoor air as well as dust buildup on furniture and throughout the home. The proper filter and alarm system will minimize these problems.

The installer must provide instructions for proper use and cleaning and encourage the client to clean the filter regularly. A neglected, severely clogged filter is worse than no filter at all. Thus the client must make a commitment to check the filter regularly and clean it when necessary.

The cleaning instructions below should be followed.

1) The loose dirt should be vacuumed out or removed by tapping against a hard surface.

2) The remaining fine dust and dirt should be washed out with clear water. Water should first be applied through the netting side of a hog hair filter to flush out the dirt.

SECTION 15

CENTRAL HVAC AND WALL/WINDOW AIR CONDITIONER FILTER AND ALARM STANDARDS

1. APPROVED MATERIALS
   - Filters
     - Shall be washable.
     - Shall be UL listed Class 2 filter material.
     - Shall conform to A.R.I. Standard 680 and UL-1096.
     - "Hog Hair" Type Bonded Fiber
       - 1" thickness shall be used in approved mobile home HVAC units (per Item 2).
       - 1/2" thickness shall be used in wall/window air conditioners and approved mobile home HVAC units (per Item 2).
     - Other Bonded Fiber
       - Shall be installed in conformance with manufacturer's instructions.
     - Foam
       - 1/4" single layer foam, 20 to 30 pores per inch (ppi).
       - Foam shall be installed only when bonded fiber is <u>not</u> feasible or is prohibited by the appliance manufacturer.
     - Other Materials
       - "Sock" type foam filters and other specialty materials may be installed when approved by the weatherization program.
   - Filter Alarms
     - Commercially available.
     - Shall be approved by the weatherization program.

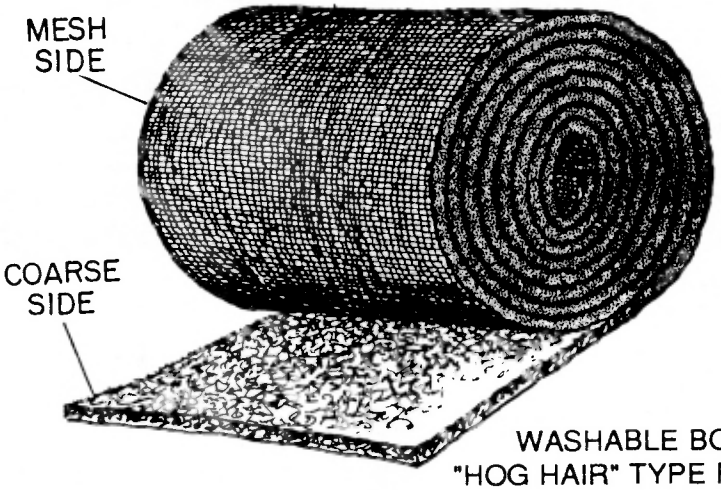

WASHABLE BONDED FIBER
"HOG HAIR" TYPE FILTER MATERIAL

2. HVAC UNITS
   - All Units
     - A reusable filter shall not be installed when:
       - Prohibited by the appliance manufacturer.
       - A proper filter retaining device is not available.
     - Filters shall be sized, supported, and installed per Items 6 and 7 and in conformance with the manufacturer's specifications.
   - 1" Bonded fiber
     - Filter shall be installed only on:
       - Gas or oil upflow furnaces equipped with air conditioning.
       - Electric furnaces and heat pumps.
     - The air handler shall be rated by the manufacturer for a 1" filter.
     - The return shall accommodate a 1" filter which can be properly secured with standard retainer.
   - 1/2" Bonded Fiber and Foam
     - Recommended for downflow units.
     - 1/2" bonded fiber shall be installed when:
       - The return can accommodate the material.
       - It can be properly secured with standard retainer.
     - Foam shall be installed when:
       - The return will not accommodate 1/2" bonded fiber.
       - Bonded fiber is prohibited by the manufacturer.

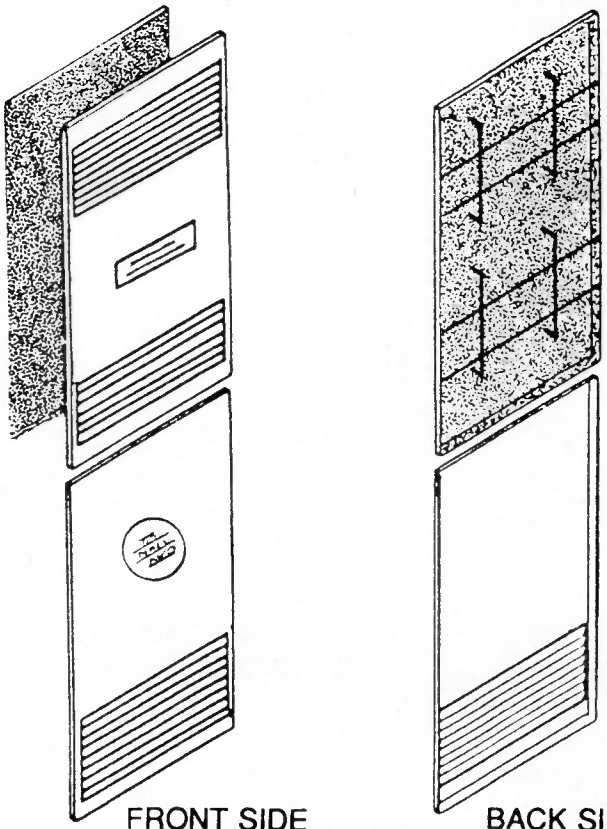

1/2" BONDED FIBER OR FOAM FILTER SECURED WITH STANDARD RETAINERS

3. WALL/WINDOW MOUNT AIR CONDITIONERS
   - All Filters
     - Filter shall be sized, supported, and installed per Items 6 and 7 and in conformance with manufacturer's specifications.
   - 1/2" Bonded Fiber Unframed
     - Shall be used when <u>not</u> prohibited by appliance manufacturer.
   - Foam Unframed
     - Shall be installed only when 1/2" bonded fiber:
       - Will <u>not</u> fit properly.
       - Is prohibited by the appliance manufacturer.

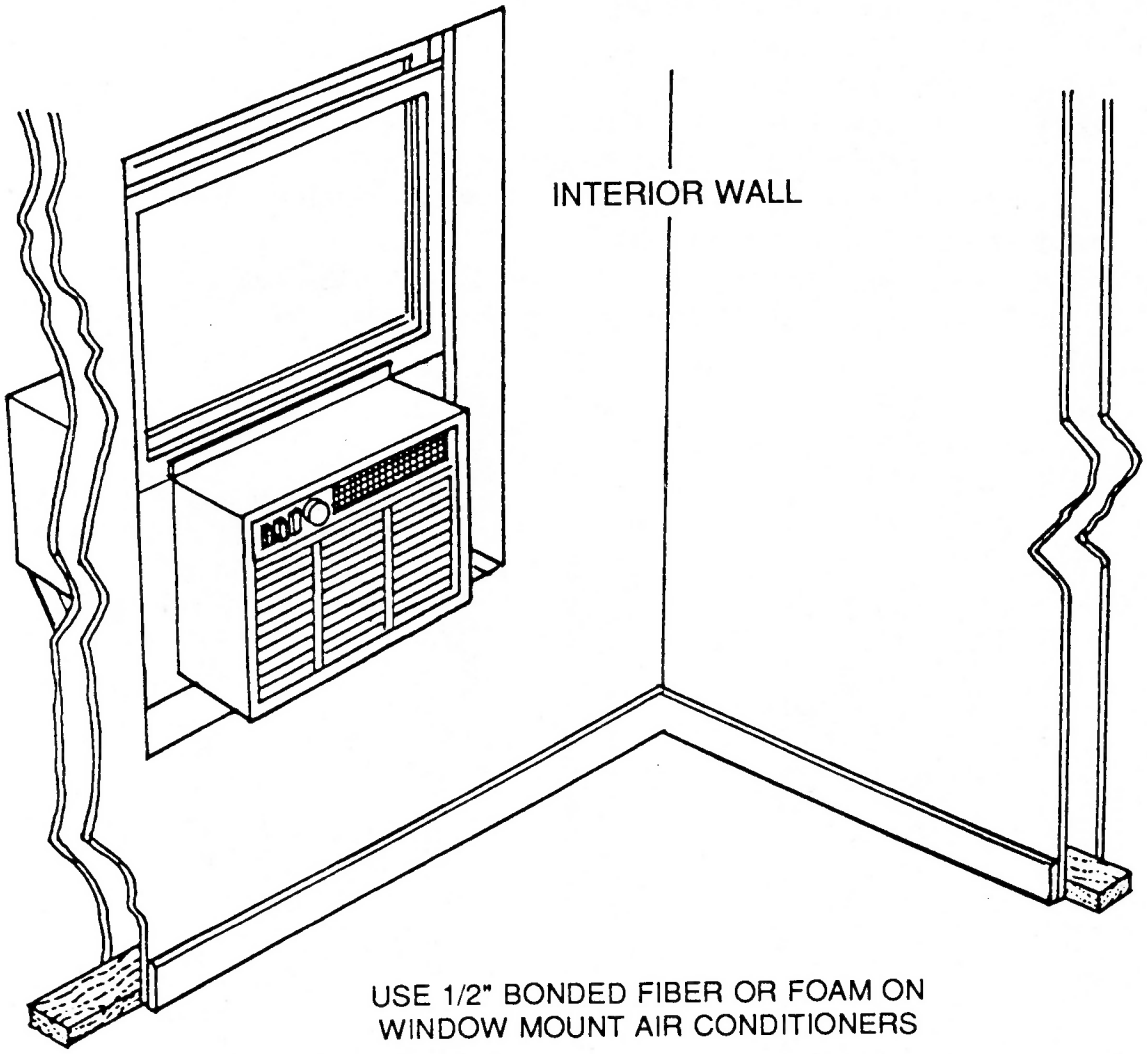

USE 1/2" BONDED FIBER OR FOAM ON
WINDOW MOUNT AIR CONDITIONERS

4. FILTER ALARMS
   - Locations
     - Recommended locations include: HVAC ducted return filters, upflow horizontal filters, and other locations compatible with manufacturer's instructions.
     - Replacement of a properly functioning alarm is <u>not</u> required.
   - Installation
     - The filter alarm shall be:
       - Placed on the intake side of the filter.
       - Located as close as possible to the center of the filter.
       - Mechanically secured to the filter to prevent accidental detachment.

5. INSTRUCTIONS
   - Filters and Alarms
     - The client shall be provided with written (and when possible verbal) instructions for proper cleaning and use.

6. FILTER SIZE AND INSTALLATION
   - Size
     - Unframed filters shall be cut for a snug fit with maximum 1/4" tolerance.
     - Framed filters shall fit within the filter housing without crimping or buckling.
   - Installation
     - All filters shall be installed in conformance with appliance and filter manufacturer's instructions.
     - The coarse ("hairy") side of "hog hair" shall always face the incoming air.

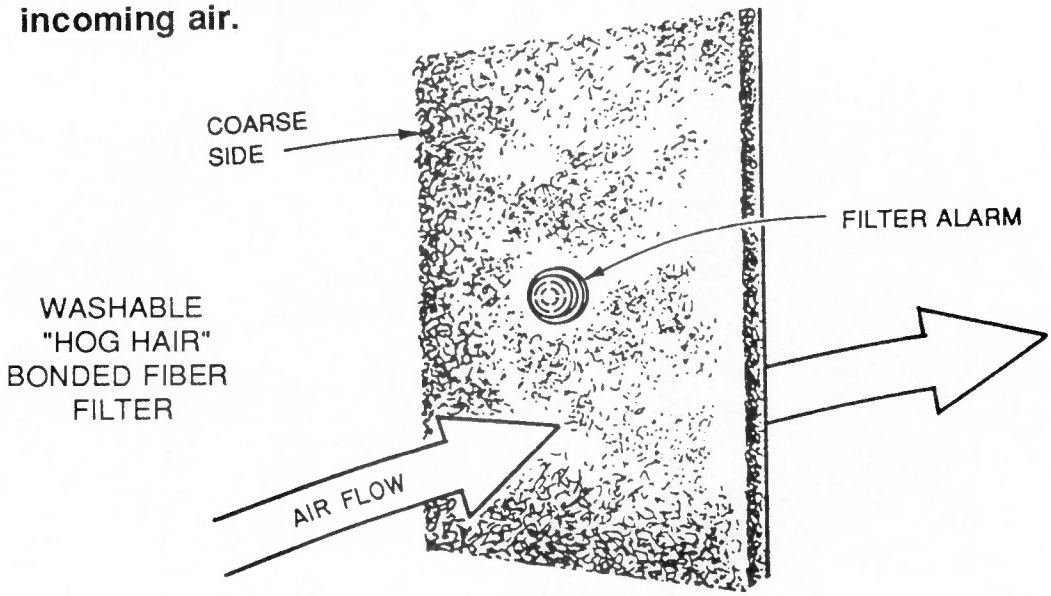

7. UNFRAMED FILTER SUPPORTS

- All Unframed Filters
  - Unframed filters shall be supported, as needed, to prevent being drawn toward the air handler.
- 1" Bonded Fiber Filters
  - When not in conflict with appliance or filter manufacturer's instructions, steel rods (galvanized recommended) shall be internally installed, as needed, to stiffen the filter.
  - Support rods shall be:
    - Adequate gauge to provide the necessary stiffness.
    - Spaced a maximum of 20" on center.
    - Sized to fully extend from one edge of the filter to the other.
    - Inserted into the coarse filter layer near the netting side of "hog hair" type.
    - Inserted in the center of the filter medium, or per manufacturer's instuctions, for other types.
  - Filters over 20" long in either direction shall be supported.
  - At least one rod shall be positioned so that both ends are supported by a solid surface.
- Other Materials
  - Materials thinner than 1" shall be secured externally.
  - Filters shall not be installed when adequate support cannot be provided.

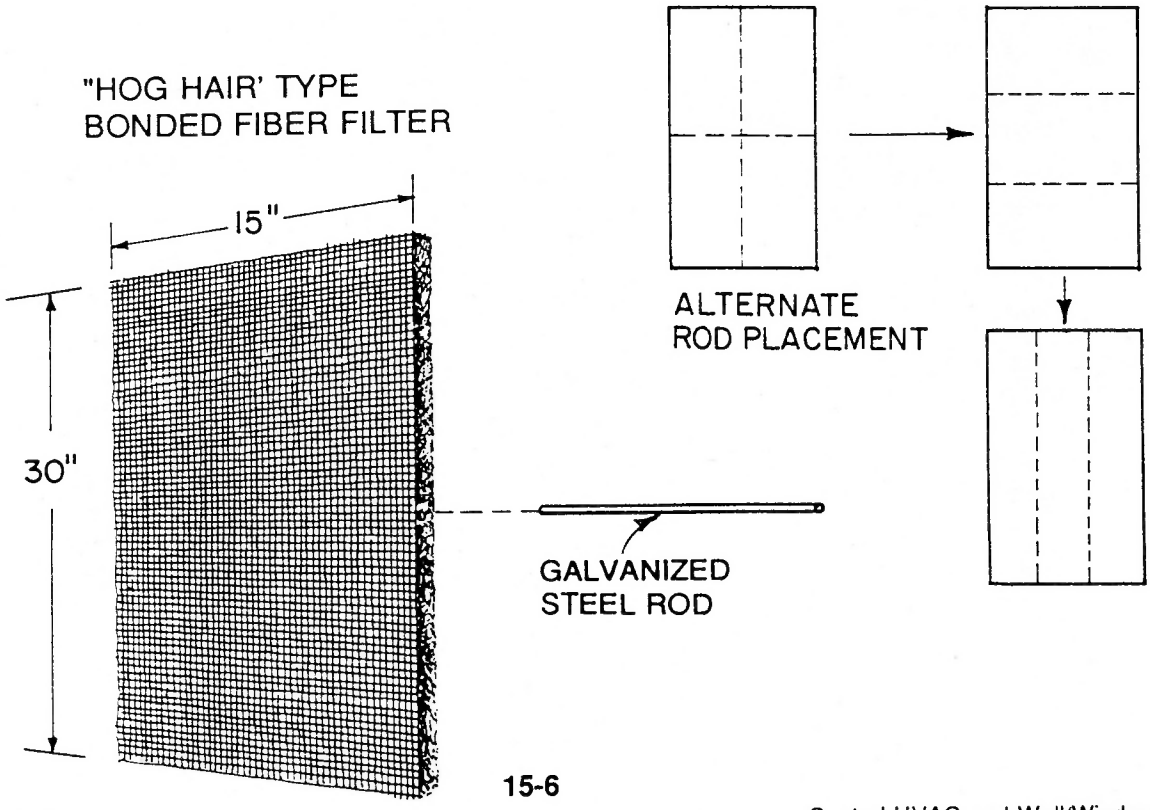

1" BONDED FIBER FILTERS

8. DUCTED HORIZONTAL AND VERTICAL
   - All Filters
     - Filters shall be sized, supported, and installed per Items 6 and 7.
     - An alarm shall be installed per Item 4 when possible.
   - Unframed
     - Internal support shall be installed as needed.
   - Framed Reusable
     - Internal support not required.

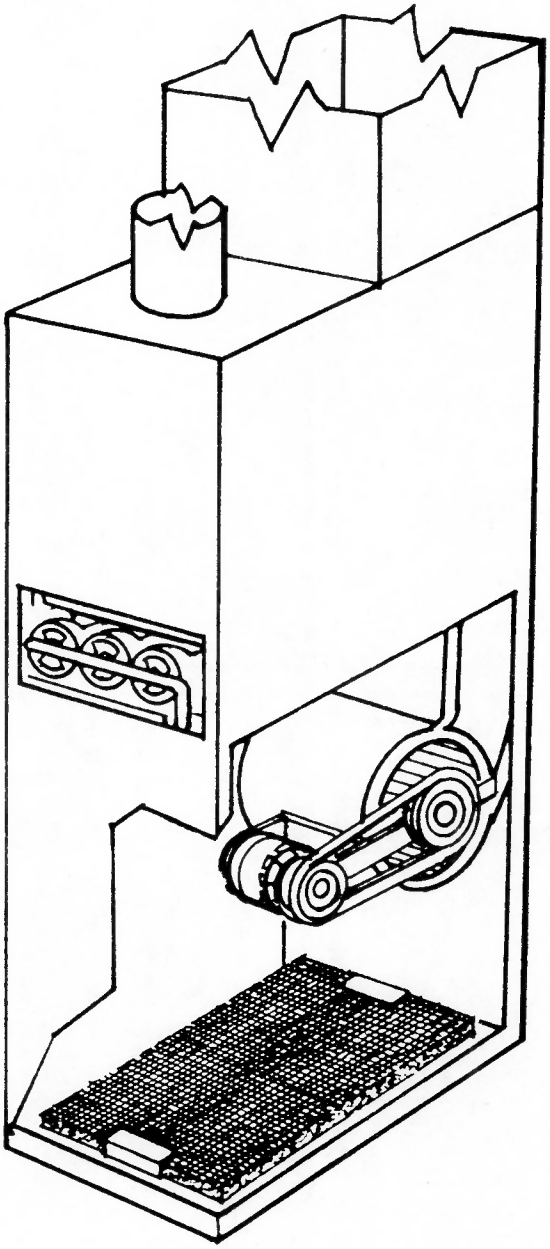

1" BONDED FIBER FILTERS (continued)

9. DUCTED RETURN INTAKES
   - All Filters
     - Filters shall be sized, supported, and installed per Items 6 and 7.
     - A filter alarm shall be installed per Item 4.
   - Unframed
     - Internal support shall be installed as needed.
   - Framed
     - Internal support not required.

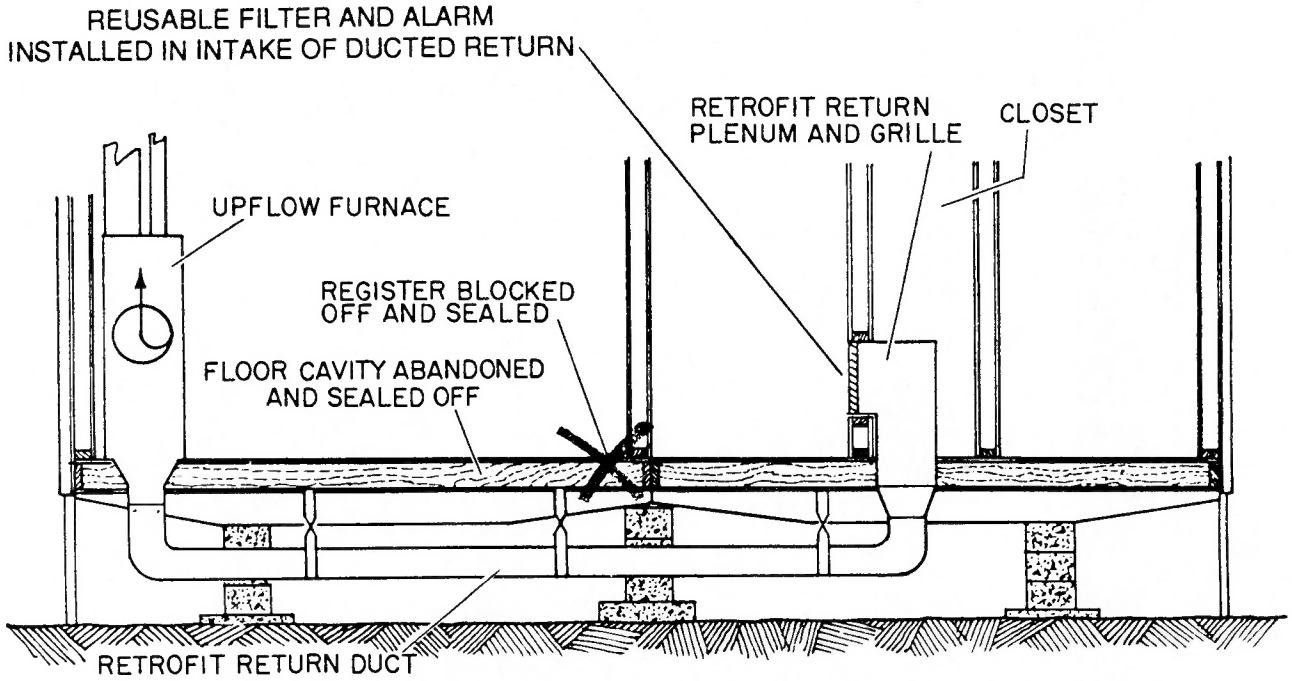

NONFEASIBILITY CRITERIA FOR REUSABLE FILTERS

1. The appliance is not operable.
2. A serviceable reusable filter is already installed.
3. The installation of the types of filters provided by the program is prohibited by the appliance manufacturer.
4. The appliance is not intended to have a filter.
5. Filter replacement would require removal of a flue, duct, or pipe.
6. The proper filter support or retaining device is not available.

NONFEASIBILITY CRITERIA FOR FILTER ALARMS

1. A serviceable alarm is already installed.
2. Installation of an alarm is prohibited by the appliance manufacturer.
3. Filter type, location, and/or retaining assembly prevents proper alarm installation.

APPENDIX -A-

Economic Stop Policy

- APPENDIX A -

The Economic Stop Policy was created to provide blower door weatherization crews with a simple way to determine when it is no longer cost effective to continue installing the "infiltration reduction measures". They are Duct System Sealing and Shell Infiltration Reduction, and economic stop parameters are provided for each.

For example, assume the Economic Stop Policy says the minimum feasible duct leakage reduction for a crew of two is 50 CFM_{50} per hour. If the crew works for an hour and reduces duct leakage by 60 CFM_{50} (or 30 CFM_{50} in a half hour), they are producing results which exceed the minimum guideline. Duct sealing is still economically feasible, and they continue working.

If, however, the next hour of work results in only a 40 CFM_{50} leakage reduction (or 20 CFM_{50} in a half hour), the point of economic stop is reached. The crew discontinues duct system sealing because it is now costing more to continue working than the projected energy savings can justify over the selected payback period.

Since duct sealing is no longer cost effective, the crew begins shell infiltration reduction--if the house is above the Minimum Allowable CFM_{50} Shell Leakage ("Minimum Ventilation Requirement") per Appendix B.

It is estimated that the payback for shell sealing is approximately one fourth that of duct sealing. Therefore, the economic stop parameter for shell work in this example is 200 CFM_{50} per hour (four times the duct minimum of 50 CFM_{50}). The crew performs shell infiltration reduction until an hour's work reduces leakage by less than 200 CFM_{50}.

At that point, the economic stop parameters for both duct and shell sealing have been met. Blower door driven weatherization is complete, and the attention shifts to non-infiltration work (water measures, fluorescent bulbs, insulation, etc.).

The pilot studies used to develop this standards manual were done in California where Economic Stop Policy tables were created for counties throughout the state (samples on page A-6 and A-7). The formulas used to create the tables take into account a variety of factors including local labor rates, number of annual heating and cooling degree days, cost of fuel, weather conditions associated with geographic location, and the type of heating and cooling system in use. It would be impractical to create

similar tables for the entire country, so a formula is presented which can be applied by each weatherization contractor to determine the economic stop requirements for their local area. The calculations for each type of fuel and heating/cooling system need to be made only once, and the resulting minimum CFM_{50} requirements will remain in effect until labor rates and/or fuel costs change.

Page A-3 contains a sample Calculation Worksheet filled out step-by-step. The example is for a home in a geographic area where the LBL factor [see Appendix B] is 17-20 (a conservative 17 is used) and the average labor rate is $40/hour (gross contract rate including all employee overhead). The home has a central forced air system with a natural gas furnace and refrigerated air conditioning. Efficiencies and fuel costs are taken from the accompanying Sample Parameters on page A-4, the program payback target is assumed to be 10 years, the annual heating degree days are 4288, and the annual cooling degree days are 1045.

The calculations show that the minimum infiltration reduction which must be achieved by one person in one hour for shell sealing to be economically feasible is 76 CFM_{50}. For a crew of two, the figure is doubled to 152 CFM_{50} per hour. Thus two people must achieve a reduction in shell leakage of at least 152 CFM_{50} during an hour's work to justify continuing with shell sealing.

Converting to shorter or longer periods of time requires simple mathematical calculations. If the crew works a half hour, they only need to achieve half the result (152 x 0.5 = 76 CFM_{50} / half hour). If they work an hour and a quarter before they stop to check results, they must achieve a 190 CFM_{50} reduction for shell sealing to remain cost effective (152 x 1.25 = 190 CFM_{50} /1.25 hour).

As the footnote at the bottom of page A-3 instructs, the crew divides the minimum shell leakage by 4 to determine the minimum CFM_{50} duct leakage reduction required per hour. In this example, that is 38 CFM_{50} (152 / 4 = 38 CFM_{50}). The crew continues working at duct sealing as long as they achieve a leakage reduction of at least 38 CFM_{50} per hour (19 CFM_{50} / half hour). When an hour's work produces a reduction of only 30 CFM_{50}, for example, they stop working on ducts and begin shell infiltration reduction (if feasible).

Note that even though the initial answer on the calculation worksheet is for minimum acceptable <u>shell</u> leakage reduction, duct sealing is a higher priority and is normally done first.

ECONOMIC STOP POLICY CALCULATION WORKSHEET

EXAMPLE

PARAMETERS

Labor rate per person:	$40.00	(A)
Payback period:	10 years	(B)
LBL factor for area:	17	(C)
AHDD for area:	4,288	(D)
ACDD for area:	1,045	(E)
Btus per unit for HEATING fuel:	100,000	(F)
Dollars per unit of HEATING fuel:	$0.55	(G)
Delivered efficiency of heating system:	0.55	(H)
Btus per unit for COOLING fuel:	3,412	(I)
Dollars per unit of COOLING fuel:	$0.11	(J)
Delivered efficiency of COOLING system:	2.25	(K)

EQUATION

Minimum CFM50 reduction per person per hour =

$$\frac{A \times C}{B \times 15.552 \times \left[\frac{D \times G}{F \times H} + \frac{E \times J}{I \times K}\right]}$$

STEP METHOD

1)	F times H	= 55000 (L)	7)	O divided by P	= 0.014973297 (Q)
2)	D times G	= 2358.4 (M)	8)	N plus Q	= 0.057853297 (R)
3)	M divided by L	= 0.04288 (N)	9)	R times 15.552	= 0.899734473 (S)
4)	If cooling system does not exist, then (Q) =0 (zero) (Skip ahead to step 8)		10)	S times B	= 8.997344728 (T)
5)	E times J	= 114.95 (O)	11)	A times C	= 680 (U)
6)	I times K	= 7677 (P)	12)	U divided by T (rounded up)	= 76 (Answer)

(Answer) is the minimum amount of **shell** infiltration reduction required per hour, per person for the specified heating system, cooling system and weather conditions. To calculate minimum reduction for **duct** sealing, divide (Answer) by 4.

ECONOMIC STOP POLICY
SAMPLE PARAMETERS

TABLE OF BRITISH THERMAL UNITS (Btus) PER UNIT OF FUEL

FUEL TYPE	UNIT	EQUIVALENT Btus
Natural Gas	Therm	100,000
Liquid Petroleum	Liquid Gallon	91,961
Wood	Cord	20,600,000
Electricity	KWH	3,412
Fuel Oil #1	Gallon	134,950
Fuel Oil #2	Gallon	138,800
Fuel Oil #4	Gallon	145,600
Fuel Oil #5	Gallon	148,400
Fuel Oil #6	Gallon	153,600

TABLE OF DEFAULT EFFICIENCIES

SYSTEM	EFFICIENCY
Heat Pump (heat)	2.25
Heat Pump (cool)	2.25
Refrigeration	2.25
Gas Furnace	0.55
Oil Furnace	0.55
Electric Resistance	1.00
Fireplace	0.25
Non-EPA Certified Wood Stove	0.44
EPA Certified Wood Stove	0.65

The LBL factor can be found in Appendix E of the 1992 Minneapolis Blower Door Operation Manual or reference Alan Meier's article titled "Infiltration: Just ACH50 Divided by 20?" in the July/August 1986 issue of Energy Auditor and Retrofitter (now Home Energy) on page 17.

ECONOMIC STOP POLICY
CALCULATION WORKSHEET

PARAMETERS

Labor rate per person: ..... _____ (A)

Payback period: ..... _____ (B)

LBL factor for area: ..... _____ (C)

AHDD for area: ..... _____ (D)

ACDD for area: ..... _____ (E)

Btus per unit for HEATING fuel: ..... _____ (F)

Dollars per unit of HEATING fuel: ..... _____ (G)

Delivered efficiency of heating system: ..... _____ (H)

Btus per unit for COOLING fuel: ..... _____ (I)

Dollars per unit of COOLING fuel: ..... _____ (J)

Delivered efficiency of COOLING system: ..... _____ (K)

EQUATION

Minimum CFM50 reduction per person per hour =

$$\frac{A \times C}{B \times 15.552 \times \left[\frac{D \times G}{F \times H} + \frac{E \times J}{I \times K}\right]}$$

STEP METHOD

1) F times H = _____ (L)

2) D times G = _____ (M)

3) M divided by L = _____ (N)

4) If cooling system does not exist, then (Q) =0 (zero) (Skip ahead to step 8)

5) E times J = _____ (O)

6) I times K = _____ (P)

7) O divided by P = _____ (Q)

8) N plus Q = _____ (R)

9) R times 15.552 = _____ (S)

10) S times B = _____ (T)

11) A times C = _____ (U)

12) U divided by T (rounded up) = _____ (Answer)

(Answer) is the minimum amount of **shell** infiltration reduction required per hour, per person for the specified heating system, cooling system and weather conditions. To calculate minimum reduction for **duct** sealing, divide (Answer) by 4.

APPENDIX -A-
DUCT LEAKAGE
(CALIFORNIA)

Economic Minimum Amount of Duct Leakage CFM50 to Obtain Per Person Per Hour										
	FUEL TYPE									
	NATURAL GAS		ELECTRIC				WOOD		LIQUID PETROLEUM	
COUNTY	Heat Only	Heat & Elec. Cool	Resist. Heat Only	Cool Only (1)	Resist. Heat & Elec. Cool	Heat Pump Heat & Cool	Heat Only	Heat & Elec. Cool	Heat Only	Heat & Elec. Cool
ORANGE	41	29	16	97	14	27	43	30	17	15
PLACER	15	13	5	104	5	10	14	12	5	5
PLUMAS	13	13	5	402	4	10	12	12	5	5
RIVERSIDE	44	18	17	31	11	17	46	19	18	11
SACRAMENTO	31	22	12	77	10	20	28	21	11	10
SAN BENITO	30	21	10	71	9	17	28	20	11	10
SAN BERNARDINO	35	16	14	28	9	15	37	16	15	10
SAN DIEGO	36	25	13	83	11	22	34	24	14	12
SAN FRANCISCO	29	28	10	907	10	21	27	26	11	10
SAN JOAQUIN	31	21	10	66	9	17	28	20	11	10
SAN LUIS OBISPO	29	26	10	213	9	20	27	24	11	10
SAN MATEO	29	27	10	327	10	[illegible]	27	25	11	10
SANTA BARBARA	34	30	12	302	12	[illegible]	32	29	13	12
SANTA CLARA	33	28	11	161	[illegible]	[illegible]	30	26	12	11
SANTA CRUZ	27	27	9	1,198	[illegible]	[illegible]	25	24	10	10
SHASTA	22	16	7	[illegible]	[illegible]	13	20	15	8	7
SIERRA	12	11	4	[illegible]	[illegible]	9	11	10	4	4
SISKIYOU	16	15	5	[illegible]	[illegible]	11	15	14	6	6
SOLANO	32	20	11	[illegible]	9	17	29	19	12	10
SONOMA	30	25	10	[illegible]	9	20	28	23	11	10
STANISLAUS	33	20	11	53	9	17	30	19	12	10
SUTTER	37	21	13	50	10	18	34	20	14	11
TEHAMA	18	14	6	67	6	11	17	13	7	6
TRINITY	18	16	6	138	6	12	17	15	7	6
TULARE	32	17	11	38	8	15	29	17	12	9
TUOLUMNE	20	17	7	101	6	13	19	16	7	7
VENTURA	35	27	14	114	12	25	37	28	15	13
YOLO	32	20	11	55	9	17	29	19	12	10
YUBA	34	19	12	44	9	16	32	18	13	10

(1) (Heat Pump and Refrigeration Units)

SAMPLE

APPENDIX -A-
SHELL LEAKAGE
(CALIFORNIA)

Economic Minimum Amount of Shell Leakage CFM50 to Obtain Per Person Per Hour

COUNTY	FUEL TYPE									
	NATURAL GAS		ELECTRIC				WOOD		LIQUID PETROLEUM	
	Heat Only	Heat & Elec. Cool	Resist. Heat Only	Cool Only (1)	Resist. Heat & Elec. Cool	Heat Pump Heat & Cool	Heat Only	Heat & Elec. Cool	Heat Only	Heat & Elec. Cool
ORANGE	206	145	81	483	70	133	216	149	86	73
PLACER	75	66	25	522	24	51	69	61	27	26
PLUMAS	67	65	23	2,009	22	49	62	60	24	24
RIVERSIDE	219	91	86	155	55	86	229	93	91	57
SACRAMENTO	153	109	60	383	52	100	140	103	56	49
SAN BENITO	152	107	51	356	45	87	139	100	55	48
SAN BERNARDINO	175	78	69	142	46	74	183	80	73	48
SAN DIEGO	178	124	65	413	56	108	172	121	68	59
SAN FRANCISCO	145	141	49	4,534	48	107	133	129	53	52
SAN JOAQUIN	154	105	52	330	45	86	141	99	56	48
SAN LUIS OBISPO	145	128	49	1,065	46	99	133	118	53	50
SAN MATEO	147	135	49	1,636	48		134	124	53	52
SANTA BARBARA	169	152	60	1,509	58		160	145	64	61
SANTA CLARA	166	138	56	806			152	128	60	56
SANTA CRUZ	136	133	45	5,9[illegible]			124	122	49	49
SHASTA	109	79	36			[illegible]4	100	74	40	35
SIERRA	58	57	19			43	53	52	21	21
SISKIYOU	82	74	27		27	57	75	68	30	29
SOLANO	158	102	53		45	84	145	96	58	48
SONOMA	151	124	50	693	47	98	138	115	55	51
STANISLAUS	163	101	55	265	45	84	150	96	60	49
SUTTER	187	107	63	252	50	90	172	102	68	54
TEHAMA	90	71	30	336	28	57	83	66	33	30
TRINITY	90	80	30	689	29	62	83	74	33	31
TULARE	160	87	54	192	42	74	147	83	58	45
TUOLUMNE	102	85	34	503	32	67	93	79	37	35
VENTURA	177	135	69	571	62	123	184	139	73	65
YOLO	158	100	53	275	44	83	145	95	58	48
YUBA	172	97	58	221	46	82	158	92	63	49

(1) (Heat Pump and Refrigeration Units)

SAMPLE

APPENDIX -B-

Minimum Ventilation Requirement

- APPENDIX B -

The Minimum Ventilation Requirement is a liberal estimate of the safe amount of natural infiltration for a home, based upon the ASHRAE standards of .35 ACH (air changes per hour) or 15 CFM (cubic feet per minute) per person (natural). The "safer" of the two methods is used to determine each minimum CFM_{50} listed in the accompanying charts.

Natural ventilation parameters are converted to CFM_{50} by application of a climate-oriented factor developed by Lawrence Berkeley Laboratory (the "LBL factor"). It takes into consideration average temperatures and windiness in different regions of the country. An explanation of the LBL factor can be found in Appendix E of the 1992 Minneapolis Blower Door Operation Manual and in Alan Meier's article titled "Infiltration: Just ACH_{50} Divided by 20?" in the July/August 1986 issue of Energy Auditor and Retrofitter (now Home Energy), page 17.

Appendix B provides four sets of charts, each one geared to the low end of one of the four climate correction factor ranges contained in the above referenced article.

To determine the Minimum Ventilation Requirements for any given area, first select the set of charts labeled with the LBL factor matching the low end of the range applicable to that area.

Next, select the horizontal band applicable to the number of occupants and the line within that band associated with the Btu/hr input total for the open combustion appliances drawing combustion air from the living space. Then read across to the column representing the size of the house and find the Minimum Allowable CFM_{50} Shell Leakage for the dwelling.

MINIMUM VENTILATION REQUIREMENT [LBL = 14]

No. of Occupants (1)	Total Appliance(s) Input in Btu/hr (2)	Cautionary Level (3)	Minimum Allowable CFM50 Shell Leakage Conditioned Living Area (4) (5)							
			1200 sqft or less	1300 sqft	1400 sqft	1500 sqft	1600 sqft	1800 sqft	2000 sqft	2200 sqft or more
2	0	420	1,200	1,200	1,200	1,200	1,200	1,200	1,307	1,437
2	20,000	540	1,200	1,200	1,200	1,200	1,200	1,200	1,307	1,437
2	40,000	660	1,200	1,200	1,200	1,200	1,200	1,200	1,307	1,437
2	60,000	780	1,200	1,200	1,200	1,200	1,200	1,200	1,307	1,437
2	80,000	900	1,200	1,200	1,200	1,200	1,200	1,200	1,307	1,437
2	100,000	1,020	1,200	1,200	1,200	1,200	1,200	1,200	1,307	1,437
2	120,000	1,140	1,200	1,200	1,200	1,200	1,200	1,200	1,307	1,437
2	140,000	1,260	1,260	1,260	1,260	1,260	1,260	1,260	1,307	1,437
3	0	630	1,200	1,200	1,200	1,200	1,200	1,200	1,307	1,437
3	20,000	750	1,200	1,200	1,200	1,200	1,200	1,200	1,307	1,437
3	40,000	870	1,200	1,200	1,200	1,200	1,200	1,200	1,307	1,437
3	60,000	990	1,200	1,200	1,200	1,200	1,200	1,200	1,307	1,437
3	80,000	1,110	1,200	1,200	1,200	1,200	1,200	1,200	1,307	1,437
3	100,000	1,230	1,230	1,230	1,230	1,230	1,230	1,230	1,307	1,437
3	120,000	1,350	1,350	1,350	1,350	1,350	1,350	1,350	1,350	1,437
3	140,000	1,470	1,470	1,470	1,470	1,470	1,470	1,470	1,470	1,470
4	0	840	1,200	1,200	1,200	1,200	1,200	1,200	1,307	1,437
4	20,000	960	1,200	1,200	1,200	1,200	1,200	1,200	1,307	1,437
4	40,000	1,080	1,200	1,200	1,200	1,200	1,200	1,200	1,307	1,437
4	60,000	1,200	1,200	1,200	1,200	1,200	1,200	1,200	1,307	1,437
4	80,000	1,320	1,320	1,320	1,320	1,320	1,320	1,320	1,320	1,437
4	100,000	1,440	1,440	1,440	1,440	1,440	1,440	1,440	1,440	1,440
4	120,000	1,560	1,560	1,560	1,560	1,560	1,560	1,560	1,560	1,560
4	140,000	1,680	1,680	1,680	1,680	1,680	1,680	1,680	1,680	1,680
5	0	1,050	1,200	1,200	1,200	1,200	1,200	1,200	1,307	1,437
5	20,000	1,170	1,200	1,200	1,200	1,200	1,200	1,200	1,307	1,437
5	40,000	1,290	1,290	1,290	1,290	1,290	1,290	1,290	1,307	1,437
5	60,000	1,410	1,410	1,410	1,410	1,410	1,410	1,410	1,410	1,437
5	80,000	1,530	1,530	1,530	1,530	1,530	1,530	1,530	1,530	1,530
5	100,000	1,650	1,650	1,650	1,650	1,650	1,650	1,650	1,650	1,650
5	120,000	1,770	1,770	1,770	1,770	1,770	1,770	1,770	1,770	1,770
5	140,000	1,890	1,890	1,890	1,890	1,890	1,890	1,890	1,890	1,890
6	0	1,260	1,260	1,260	1,260	1,260	1,260	1,260	1,307	1,437
6	20,000	1,380	1,380	1,380	1,380	1,380	1,380	1,380	1,380	1,437
6	40,000	1,500	1,500	1,500	1,500	1,500	1,500	1,500	1,500	1,500
6	60,000	1,620	1,620	1,620	1,620	1,620	1,620	1,620	1,620	1,620
6	80,000	1,740	1,740	1,740	1,740	1,740	1,740	1,740	1,740	1,740
6	100,000	1,860	1,860	1,860	1,860	1,860	1,860	1,860	1,860	1,860
6	120,000	1,980	1,980	1,980	1,980	1,980	1,980	1,980	1,980	1,980
6	140,000	2,100	2,100	2,100	2,100	2,100	2,100	2,100	2,100	2,100

Notes:

(1) A house pet may be considered an occupant. For more than 6 occupants, see back.

(2) Applies to all open combustion appliances in the conditioned space.
For Btu/hr ratings not listed, use the next higher rating or use 6 CFM50 for each 1,000 Btu/hr input.

(3) The Cautionary Level represents the absolute minimum CFM50 as prescribed by ASHRAE based upon 210 CFM50 per occupant plus 6 CFM50 per 1,000 Btu/hr of open combustion appliance input rating.

(4) For house sizes not listed, use column for next larger living area.

(5) Assumes 8' ceiling height. If the ceiling height is over 8', correct by multiplying CFM50 by the following factors: For 9' ceiling: 1.13; For 10' ceiling: 1.25; For 11' ceiling: 1.38; For 12' ceiling: 1.50.

7/7/92

MINIMUM VENTILATION REQUIREMENT [LBL = 14]

Total Appliance(s) Input in Btu/hr	Minimum Allowable CFM50 Shell Leakage													
	Number of Occupants in Dwelling (1)													
	7	8	9	10	11	12	13	14	15	16	17	18	19	20
0	1,470	1,680	1,890	2,100	2,310	2,520	2,730	2,940	3,150	3,360	3,570	3,780	3,990	4,200
10,000	1,530	1,740	1,950	2,160	2,370	2,580	2,790	3,000	3,210	3,420	3,630	3,840	4,050	4,260
15,000	1,560	1,770	1,980	2,190	2,400	2,610	2,820	3,030	3,240	3,450	3,660	3,870	4,080	4,290
20,000	1,590	1,800	2,010	2,220	2,430	2,640	2,850	3,060	3,270	3,480	3,690	3,900	4,110	4,320
25,000	1,620	1,830	2,040	2,250	2,460	2,670	2,880	3,090	3,300	3,510	3,720	3,930	4,140	4,350
30,000	1,650	1,860	2,070	2,280	2,490	2,700	2,910	3,120	3,330	3,540	3,750	3,960	4,170	4,380
35,000	1,680	1,890	2,100	2,310	2,520	2,730	2,940	3,150	3,360	3,570	3,780	3,990	4,200	4,410
40,000	1,710	1,920	2,130	2,340	2,550	2,760	2,970	3,180	3,390	3,600	3,810	4,020	4,230	4,440
45,000	1,740	1,950	2,160	2,370	2,580	2,790	3,000	3,210	3,420	3,630	3,840	4,050	4,260	4,470
50,000	1,770	1,980	2,190	2,400	2,610	2,820	3,030	3,240	3,450	3,660	3,870	4,080	4,290	4,500
55,000	1,800	2,010	2,220	2,430	2,640	2,850	3,060	3,270	3,480	3,690	3,900	4,110	4,320	4,530
60,000	1,830	2,040	2,250	2,460	2,670	2,880	3,090	3,300	3,510	3,720	3,930	4,140	4,350	4,560
65,000	1,860	2,070	2,280	2,490	2,700	2,910	3,120	3,330	3,540	3,750	3,960	4,170	4,380	4,590
70,000	1,890	2,100	2,310	2,520	2,730	2,940	3,150	3,360	3,570	3,780	3,990	4,200	4,410	4,620
75,000	1,920	2,130	2,340	2,550	2,760	2,970	3,180	3,390	3,600	3,810	4,020	4,230	4,440	4,650
80,000	1,950	2,160	2,370	2,580	2,790	3,000	3,210	3,420	3,630	3,840	4,050	4,260	4,470	4,680
85,000	1,980	2,190	2,400	2,610	2,820	3,030	3,240	3,450	3,660	3,870	4,080	4,290	4,500	4,710
90,000	2,010	2,220	2,430	2,640	2,850	3,060	3,270	3,480	3,690	3,900	4,110	4,320	4,530	4,740
95,000	2,040	2,250	2,460	2,670	2,880	3,090	3,300	3,510	3,720	3,930	4,140	4,350	4,560	4,770
100,000	2,070	2,280	2,490	2,700	2,910	3,120	3,330	3,540	3,750	3,960	4,170	4,380	4,590	4,800
105,000	2,100	2,310	2,520	2,730	2,940	3,150	3,360	3,570	3,780	3,990	4,200	4,410	4,620	4,830
110,000	2,130	2,340	2,550	2,760	2,970	3,180	3,390	3,600	3,810	4,020	4,230	4,440	4,650	4,860
115,000	2,160	2,370	2,580	2,790	3,000	3,210	3,420	3,630	3,840	4,050	4,260	4,470	4,680	4,890
120,000	2,190	2,400	2,610	2,820	3,030	3,240	3,450	3,660	3,870	4,080	4,290	4,500	4,710	4,920
125,000	2,220	2,430	2,640	2,850	3,060	3,270	3,480	3,690	3,900	4,110	4,320	4,530	4,740	4,950
130,000	2,250	2,460	2,670	2,880	3,090	3,300	3,510	3,720	3,930	4,140	4,350	4,560	4,770	4,980
135,000	2,280	2,490	2,700	2,910	3,120	3,330	3,540	3,750	3,960	4,170	4,380	4,590	4,800	5,010
140,000	2,310	2,520	2,730	2,940	3,150	3,360	3,570	3,780	3,990	4,200	4,410	4,620	4,830	5,040
145,000	2,340	2,550	2,760	2,970	3,180	3,390	3,600	3,810	4,020	4,230	4,440	4,650	4,860	5,070
150,000	2,370	2,580	2,790	3,000	3,210	3,420	3,630	3,840	4,050	4,260	4,470	4,680	4,890	5,100
155,000	2,400	2,610	2,820	3,030	3,240	3,450	3,660	3,870	4,080	4,290	4,500	4,710	4,920	5,130
160,000	2,430	2,640	2,850	3,060	3,270	3,480	3,690	3,900	4,110	4,320	4,530	4,740	4,950	5,160
165,000	2,460	2,670	2,880	3,090	3,300	3,510	3,720	3,930	4,140	4,350	4,560	4,770	4,980	5,190
170,000	2,490	2,700	2,910	3,120	3,330	3,540	3,750	3,960	4,170	4,380	4,590	4,800	5,010	5,220
175,000	2,520	2,730	2,940	3,150	3,360	3,570	3,780	3,990	4,200	4,410	4,620	4,830	5,040	5,250
180,000	2,550	2,760	2,970	3,180	3,390	3,600	3,810	4,020	4,230	4,440	4,650	4,860	5,070	5,280
185,000	2,580	2,790	3,000	3,210	3,420	3,630	3,840	4,050	4,260	4,470	4,680	4,890	5,100	5,310
190,000	2,610	2,820	3,030	3,240	3,450	3,660	3,870	4,080	4,290	4,500	4,710	4,920	5,130	5,340
195,000	2,640	2,850	3,060	3,270	3,480	3,690	3,900	4,110	4,320	4,530	4,740	4,950	5,160	5,370
200,000	2,670	2,880	3,090	3,300	3,510	3,720	3,930	4,140	4,350	4,560	4,770	4,980	5,190	5,400

Note:

(1) The Minimum Allowable CFM50 applies to units of all sizes.
This is the Cautionary Level and it is based on the ASHRAE minimum requirement of 210 CFM50 per occupant plus 6 CFM50 per 1,000 Btu/hr of open combustion appliance input rating.

7/7/92

MINIMUM VENTILATION REQUIREMENT [LBL = 17]

No. of Occupants (1)	Total Appliance(s) Input in Btu/hr (2)	Cautionary Level (3)	Minimum Allowable CFM50 Shell Leakage Conditioned Living Area (4) (5)							
			1200 sqft or less	1300 sqft	1400 sqft	1500 sqft	1600 sqft	1800 sqft	2000 sqft	2200 sqft or more
2	0	510	1,200	1,200	1,200	1,200	1,269	1,428	1,587	1,745
2	20,000	630	1,200	1,200	1,200	1,200	1,269	1,428	1,587	1,745
2	40,000	750	1,200	1,200	1,200	1,200	1,269	1,428	1,587	1,745
2	60,000	870	1,200	1,200	1,200	1,200	1,269	1,428	1,587	1,745
2	80,000	990	1,200	1,200	1,200	1,200	1,269	1,428	1,587	1,745
2	100,000	1,110	1,200	1,200	1,200	1,200	1,269	1,428	1,587	1,745
2	120,000	1,230	1,230	1,230	1,230	1,230	1,269	1,428	1,587	1,745
2	140,000	1,350	1,350	1,350	1,350	1,350	1,350	1,428	1,587	1,745
3	0	765	1,200	1,200	1,200	1,200	1,269	1,428	1,587	1,745
3	20,000	885	1,200	1,200	1,200	1,200	1,269	1,428	1,587	1,745
3	40,000	1,005	1,200	1,200	1,200	1,200	1,269	1,428	1,587	1,745
3	60,000	1,125	1,200	1,200	1,200	1,200	1,269	1,428	1,587	1,745
3	80,000	1,245	1,245	1,245	1,245	1,245	1,269	1,428	1,587	1,745
3	100,000	1,365	1,365	1,365	1,365	1,365	1,365	1,428	1,587	1,745
3	120,000	1,485	1,485	1,485	1,485	1,485	1,485	1,485	1,587	1,745
3	140,000	1,605	1,605	1,605	1,605	1,605	1,605	1,605	1,605	1,745
4	0	1,020	1,200	1,200	1,200	1,200	1,269	1,428	1,587	1,745
4	20,000	1,140	1,200	1,200	1,200	1,200	1,269	1,428	1,587	1,745
4	40,000	1,260	1,260	1,260	1,260	1,260	1,269	1,428	1,587	1,745
4	60,000	1,380	1,380	1,380	1,380	1,380	1,380	1,428	1,587	1,745
4	80,000	1,500	1,500	1,500	1,500	1,500	1,500	1,500	1,587	1,745
4	100,000	1,620	1,620	1,620	1,620	1,620	1,620	1,620	1,620	1,745
4	120,000	1,740	1,740	1,740	1,740	1,740	1,740	1,740	1,740	1,745
4	140,000	1,860	1,860	1,860	1,860	1,860	1,860	1,860	1,860	1,860
5	0	1,275	1,275	1,275	1,275	1,275	1,275	1,428	1,587	1,745
5	20,000	1,395	1,395	1,395	1,395	1,395	1,395	1,428	1,587	1,745
5	40,000	1,515	1,515	1,515	1,515	1,515	1,515	1,515	1,587	1,745
5	60,000	1,635	1,635	1,635	1,635	1,635	1,635	1,635	1,635	1,745
5	80,000	1,755	1,755	1,755	1,755	1,755	1,755	1,755	1,755	1,755
5	100,000	1,875	1,875	1,875	1,875	1,875	1,875	1,875	1,875	1,875
5	120,000	1,995	1,995	1,995	1,995	1,995	1,995	1,995	1,995	1,995
5	140,000	2,115	2,115	2,115	2,115	2,115	2,115	2,115	2,115	2,115
6	0	1,530	1,530	1,530	1,530	1,530	1,530	1,530	1,587	1,745
6	20,000	1,650	1,650	1,650	1,650	1,650	1,650	1,650	1,650	1,745
6	40,000	1,770	1,770	1,770	1,770	1,770	1,770	1,770	1,770	1,770
6	60,000	1,890	1,890	1,890	1,890	1,890	1,890	1,890	1,890	1,890
6	80,000	2,010	2,010	2,010	2,010	2,010	2,010	2,010	2,010	2,010
6	100,000	2,130	2,130	2,130	2,130	2,130	2,130	2,130	2,130	2,130
6	120,000	2,250	2,250	2,250	2,250	2,250	2,250	2,250	2,250	2,250
6	140,000	2,370	2,370	2,370	2,370	2,370	2,370	2,370	2,370	2,370

Notes:

(1) A house pet may be considered an occupant. For more than 6 occupants, see back.

(2) Applies to all open combustion appliances in the conditioned space.
For Btu/hr ratings not listed, use the next higher rating or use 6 CFM50 for each 1,000 Btu/hr input.

(3) The Cautionary Level represents the absolute minimum CFM50 as prescribed by ASHRAE based upon 255 CFM50 per occupant plus 6 CFM50 per 1,000 Btu/hr of open combustion appliance input rating.

(4) For house sizes not listed, use column for next larger living area.

(5) Assumes 8' ceiling height. If the ceiling height is over 8', correct by multiplying CFM50 by the following factors: For 9' ceiling: 1.13; For 10' ceiling: 1.25; For 11' ceiling: 1.38; For 12' ceiling: 1.50.

7/7/92

MINIMUM VENTILATION REQUIREMENT [LBL = 17]

Total Appliance(s) Input in Btu/hr	Minimum Allowable CFM50 Shell Leakage													
	Number of Occupants in Dwelling (1)													
	7	8	9	10	11	12	13	14	15	16	17	18	19	20
0	1,785	2,040	2,295	2,550	2,805	3,060	3,315	3,570	3,825	4,080	4,335	4,590	4,845	5,100
10,000	1,845	2,100	2,355	2,610	2,865	3,120	3,375	3,630	3,885	4,140	4,395	4,650	4,905	5,160
15,000	1,875	2,130	2,385	2,640	2,895	3,150	3,405	3,660	3,915	4,170	4,425	4,680	4,935	5,190
20,000	1,905	2,160	2,415	2,670	2,925	3,180	3,435	3,690	3,945	4,200	4,455	4,710	4,965	5,220
25,000	1,935	2,190	2,445	2,700	2,955	3,210	3,465	3,720	3,975	4,230	4,485	4,740	4,995	5,250
30,000	1,965	2,220	2,475	2,730	2,985	3,240	3,495	3,750	4,005	4,260	4,515	4,770	5,025	5,280
35,000	1,995	2,250	2,505	2,760	3,015	3,270	3,525	3,780	4,035	4,290	4,545	4,800	5,055	5,310
40,000	2,025	2,280	2,535	2,790	3,045	3,300	3,555	3,810	4,065	4,320	4,575	4,830	5,085	5,340
45,000	2,055	2,310	2,565	2,820	3,075	3,330	3,585	3,840	4,095	4,350	4,605	4,860	5,115	5,370
50,000	2,085	2,340	2,595	2,850	3,105	3,360	3,615	3,870	4,125	4,380	4,635	4,890	5,145	5,400
55,000	2,115	2,370	2,625	2,880	3,135	3,390	3,645	3,900	4,155	4,410	4,665	4,920	5,175	5,430
60,000	2,145	2,400	2,655	2,910	3,165	3,420	3,675	3,930	4,185	4,440	4,695	4,950	5,205	5,460
65,000	2,175	2,430	2,685	2,940	3,195	3,450	3,705	3,960	4,215	4,470	4,725	4,980	5,235	5,490
70,000	2,205	2,460	2,715	2,970	3,225	3,480	3,735	3,990	4,245	4,500	4,755	5,010	5,265	5,520
75,000	2,235	2,490	2,745	3,000	3,255	3,510	3,765	4,020	4,275	4,530	4,785	5,040	5,295	5,550
80,000	2,265	2,520	2,775	3,030	3,285	3,540	3,795	4,050	4,305	4,560	4,815	5,070	5,325	5,580
85,000	2,295	2,550	2,805	3,060	3,315	3,570	3,825	4,080	4,335	4,590	4,845	5,100	5,355	5,610
90,000	2,325	2,580	2,835	3,090	3,345	3,600	3,855	4,110	4,365	4,620	4,875	5,130	5,385	5,640
95,000	2,355	2,610	2,865	3,120	3,375	3,630	3,885	4,140	4,395	4,650	4,905	5,160	5,415	5,670
100,000	2,385	2,640	2,895	3,150	3,405	3,660	3,915	4,170	4,425	4,680	4,935	5,190	5,445	5,700
105,000	2,415	2,670	2,925	3,180	3,435	3,690	3,945	4,200	4,455	4,710	4,965	5,220	5,475	5,730
110,000	2,445	2,700	2,955	3,210	3,465	3,720	3,975	4,230	4,485	4,740	4,995	5,250	5,505	5,760
115,000	2,475	2,730	2,985	3,240	3,495	3,750	4,005	4,260	4,515	4,770	5,025	5,280	5,535	5,790
120,000	2,505	2,760	3,015	3,270	3,525	3,780	4,035	4,290	4,545	4,800	5,055	5,310	5,565	5,820
125,000	2,535	2,790	3,045	3,300	3,555	3,810	4,065	4,320	4,575	4,830	5,085	5,340	5,595	5,850
130,000	2,565	2,820	3,075	3,330	3,585	3,840	4,095	4,350	4,605	4,860	5,115	5,370	5,625	5,880
135,000	2,595	2,850	3,105	3,360	3,615	3,870	4,125	4,380	4,635	4,890	5,145	5,400	5,655	5,910
140,000	2,625	2,880	3,135	3,390	3,645	3,900	4,155	4,410	4,665	4,920	5,175	5,430	5,685	5,940
145,000	2,655	2,910	3,165	3,420	3,675	3,930	4,185	4,440	4,695	4,950	5,205	5,460	5,715	5,970
150,000	2,685	2,940	3,195	3,450	3,705	3,960	4,215	4,470	4,725	4,980	5,235	5,490	5,745	6,000
155,000	2,715	2,970	3,225	3,480	3,735	3,990	4,245	4,500	4,755	5,010	5,265	5,520	5,775	6,030
160,000	2,745	3,000	3,255	3,510	3,765	4,020	4,275	4,530	4,785	5,040	5,295	5,550	5,805	6,060
165,000	2,775	3,030	3,285	3,540	3,795	4,050	4,305	4,560	4,815	5,070	5,325	5,580	5,835	6,090
170,000	2,805	3,060	3,315	3,570	3,825	4,080	4,335	4,590	4,845	5,100	5,355	5,610	5,865	6,120
175,000	2,835	3,090	3,345	3,600	3,855	4,110	4,365	4,620	4,875	5,130	5,385	5,640	5,895	6,150
180,000	2,865	3,120	3,375	3,630	3,885	4,140	4,395	4,650	4,905	5,160	5,415	5,670	5,925	6,180
185,000	2,895	3,150	3,405	3,660	3,915	4,170	4,425	4,680	4,935	5,190	5,445	5,700	5,955	6,210
190,000	2,925	3,180	3,435	3,690	3,945	4,200	4,455	4,710	4,965	5,220	5,475	5,730	5,985	6,240
195,000	2,955	3,210	3,465	3,720	3,975	4,230	4,485	4,740	4,995	5,250	5,505	5,760	6,015	6,270
200,000	2,985	3,240	3,495	3,750	4,005	4,260	4,515	4,770	5,025	5,280	5,535	5,790	6,045	6,300

Note:

(1) The Minimum Allowable CFM50 applies to units of all sizes.
This is the Cautionary Level and it is based on the ASHRAE minimum requirement of 255 CFM50 per occupant plus 6 CFM50 per 1,000 Btu/hr of open combustion appliance input rating.

7/7/92

MINIMUM VENTILATION REQUIREMENT [LBL = 20]

No. of Occupants (1)	Total Appliance(s) Input in Btu/hr (2)	Cautionary Level (3)	Minimum Allowable CFM50 Shell Leakage — Conditioned Living Area (4) (5)							
			1200 sqft or less	1300 sqft	1400 sqft	1500 sqft	1600 sqft	1800 sqft	2000 sqft	2200 sqft or more
2	0	600	1,200	1,213	1,307	1,400	1,493	1,680	1,867	2,053
2	20,000	720	1,200	1,213	1,307	1,400	1,493	1,680	1,867	2,053
2	40,000	840	1,200	1,213	1,307	1,400	1,493	1,680	1,867	2,053
2	60,000	960	1,200	1,213	1,307	1,400	1,493	1,680	1,867	2,053
2	80,000	1,080	1,200	1,213	1,307	1,400	1,493	1,680	1,867	2,053
2	100,000	1,200	1,200	1,213	1,307	1,400	1,493	1,680	1,867	2,053
2	120,000	1,320	1,320	1,320	1,320	1,400	1,493	1,680	1,867	2,053
2	140,000	1,440	1,440	1,440	1,440	1,440	1,493	1,680	1,867	2,053
3	0	900	1,200	1,213	1,307	1,400	1,493	1,680	1,867	2,053
3	20,000	1,020	1,200	1,213	1,307	1,400	1,493	1,680	1,867	2,053
3	40,000	1,140	1,200	1,213	1,307	1,400	1,493	1,680	1,867	2,053
3	60,000	1,260	1,260	1,260	1,307	1,400	1,493	1,680	1,867	2,053
3	80,000	1,380	1,380	1,380	1,380	1,400	1,493	1,680	1,867	2,053
3	100,000	1,500	1,500	1,500	1,500	1,500	1,500	1,680	1,867	2,053
3	120,000	1,620	1,620	1,620	1,620	1,620	1,620	1,680	1,867	2,053
3	140,000	1,740	1,740	1,740	1,740	1,740	1,740	1,740	1,867	2,053
4	0	1,200	1,200	1,213	1,307	1,400	1,493	1,680	1,867	2,053
4	20,000	1,320	1,320	1,320	1,320	1,400	1,493	1,680	1,867	2,053
4	40,000	1,440	1,440	1,440	1,440	1,440	1,493	1,680	1,867	2,053
4	60,000	1,560	1,560	1,560	1,560	1,560	1,560	1,680	1,867	2,053
4	80,000	1,680	1,680	1,680	1,680	1,680	1,680	1,680	1,867	2,053
4	100,000	1,800	1,800	1,800	1,800	1,800	1,800	1,800	1,867	2,053
4	120,000	1,920	1,920	1,920	1,920	1,920	1,920	1,920	1,920	2,053
4	140,000	2,040	2,040	2,040	2,040	2,040	2,040	2,040	2,040	2,053
5	0	1,500	1,500	1,500	1,500	1,500	1,500	1,680	1,867	2,053
5	20,000	1,620	1,620	1,620	1,620	1,620	1,620	1,680	1,867	2,053
5	40,000	1,740	1,740	1,740	1,740	1,740	1,740	1,740	1,867	2,053
5	60,000	1,860	1,860	1,860	1,860	1,860	1,860	1,860	1,867	2,053
5	80,000	1,980	1,980	1,980	1,980	1,980	1,980	1,980	1,980	2,053
5	100,000	2,100	2,100	2,100	2,100	2,100	2,100	2,100	2,100	2,100
5	120,000	2,220	2,220	2,220	2,220	2,220	2,220	2,220	2,220	2,220
5	140,000	2,340	2,340	2,340	2,340	2,340	2,340	2,340	2,340	2,340
6	0	1,800	1,800	1,800	1,800	1,800	1,800	1,800	1,867	2,053
6	20,000	1,920	1,920	1,920	1,920	1,920	1,920	1,920	1,920	2,053
6	40,000	2,040	2,040	2,040	2,040	2,040	2,040	2,040	2,040	2,053
6	60,000	2,160	2,160	2,160	2,160	2,160	2,160	2,160	2,160	2,160
6	80,000	2,280	2,280	2,280	2,280	2,280	2,280	2,280	2,280	2,280
6	100,000	2,400	2,400	2,400	2,400	2,400	2,400	2,400	2,400	2,400
6	120,000	2,520	2,520	2,520	2,520	2,520	2,520	2,520	2,520	2,520
6	140,000	2,640	2,640	2,640	2,640	2,640	2,640	2,640	2,640	2,640

Notes:

(1) A house pet may be considered an occupant. For more than 6 occupants, see back.

(2) Applies to all open combustion appliances in the conditioned space.
For Btu/hr ratings not listed, use the next higher rating or use 6 CFM50 for each 1,000 Btu/hr input.

(3) The Cautionary Level represents the absolute minimum CFM50 as prescribed by ASHRAE based upon 300 CFM50 per occupant plus 6 CFM50 per 1,000 Btu/hr of open combustion appliance input rating.

(4) For house sizes not listed, use column for next larger living area.

(5) Assumes 8' ceiling height. If the ceiling height is over 8', correct by multiplying CFM50 by the following factors: For 9' ceiling: 1.13; For 10' ceiling: 1.25; For 11' ceiling: 1.38; For 12' ceiling: 1.50.

7/7/92

MINIMUM VENTILATION REQUIREMENT [LBL = 20]

Total Appliance(s) Input in Btu/hr	Minimum Allowable CFM50 Shell Leakage													
	Number of Occupants in Dwelling (1)													
	7	8	9	10	11	12	13	14	15	16	17	18	19	20
0	2,100	2,400	2,700	3,000	3,300	3,600	3,900	4,200	4,500	4,800	5,100	5,400	5,700	6,000
10,000	2,160	2,460	2,760	3,060	3,360	3,660	3,960	4,260	4,560	4,860	5,160	5,460	5,760	6,060
15,000	2,190	2,490	2,790	3,090	3,390	3,690	3,990	4,290	4,590	4,890	5,190	5,490	5,790	6,090
20,000	2,220	2,520	2,820	3,120	3,420	3,720	4,020	4,320	4,620	4,920	5,220	5,520	5,820	6,120
25,000	2,250	2,550	2,850	3,150	3,450	3,750	4,050	4,350	4,650	4,950	5,250	5,550	5,850	6,150
30,000	2,280	2,580	2,880	3,180	3,480	3,780	4,080	4,380	4,680	4,980	5,280	5,580	5,880	6,180
35,000	2,310	2,610	2,910	3,210	3,510	3,810	4,110	4,410	4,710	5,010	5,310	5,610	5,910	6,210
40,000	2,340	2,640	2,940	3,240	3,540	3,840	4,140	4,440	4,740	5,040	5,340	5,640	5,940	6,240
45,000	2,370	2,670	2,970	3,270	3,570	3,870	4,170	4,470	4,770	5,070	5,370	5,670	5,970	6,270
50,000	2,400	2,700	3,000	3,300	3,600	3,900	4,200	4,500	4,800	5,100	5,400	5,700	6,000	6,300
55,000	2,430	2,730	3,030	3,330	3,630	3,930	4,230	4,530	4,830	5,130	5,430	5,730	6,030	6,330
60,000	2,460	2,760	3,060	3,360	3,660	3,960	4,260	4,560	4,860	5,160	5,460	5,760	6,060	6,360
65,000	2,490	2,790	3,090	3,390	3,690	3,990	4,290	4,590	4,890	5,190	5,490	5,790	6,090	6,390
70,000	2,520	2,820	3,120	3,420	3,720	4,020	4,320	4,620	4,920	5,220	5,520	5,820	6,120	6,420
75,000	2,550	2,850	3,150	3,450	3,750	4,050	4,350	4,650	4,950	5,250	5,550	5,850	6,150	6,450
80,000	2,580	2,880	3,180	3,480	3,780	4,080	4,380	4,680	4,980	5,280	5,580	5,880	6,180	6,480
85,000	2,610	2,910	3,210	3,510	3,810	4,110	4,410	4,710	5,010	5,310	5,610	5,910	6,210	6,510
90,000	2,640	2,940	3,240	3,540	3,840	4,140	4,440	4,740	5,040	5,340	5,640	5,940	6,240	6,540
95,000	2,670	2,970	3,270	3,570	3,870	4,170	4,470	4,770	5,070	5,370	5,670	5,970	6,270	6,570
100,000	2,700	3,000	3,300	3,600	3,900	4,200	4,500	4,800	5,100	5,400	5,700	6,000	6,300	6,600
105,000	2,730	3,030	3,330	3,630	3,930	4,230	4,530	4,830	5,130	5,430	5,730	6,030	6,330	6,630
110,000	2,760	3,060	3,360	3,660	3,960	4,260	4,560	4,860	5,160	5,460	5,760	6,060	6,360	6,660
115,000	2,790	3,090	3,390	3,690	3,990	4,290	4,590	4,890	5,190	5,490	5,790	6,090	6,390	6,690
120,000	2,820	3,120	3,420	3,720	4,020	4,320	4,620	4,920	5,220	5,520	5,820	6,120	6,420	6,720
125,000	2,850	3,150	3,450	3,750	4,050	4,350	4,650	4,950	5,250	5,550	5,850	6,150	6,450	6,750
130,000	2,880	3,180	3,480	3,780	4,080	4,380	4,680	4,980	5,280	5,580	5,880	6,180	6,480	6,780
135,000	2,910	3,210	3,510	3,810	4,110	4,410	4,710	5,010	5,310	5,610	5,910	6,210	6,510	6,810
140,000	2,940	3,240	3,540	3,840	4,140	4,440	4,740	5,040	5,340	5,640	5,940	6,240	6,540	6,840
145,000	2,970	3,270	3,570	3,870	4,170	4,470	4,770	5,070	5,370	5,670	5,970	6,270	6,570	6,870
150,000	3,000	3,300	3,600	3,900	4,200	4,500	4,800	5,100	5,400	5,700	6,000	6,300	6,600	6,900
155,000	3,030	3,330	3,630	3,930	4,230	4,530	4,830	5,130	5,430	5,730	6,030	6,330	6,630	6,930
160,000	3,060	3,360	3,660	3,960	4,260	4,560	4,860	5,160	5,460	5,760	6,060	6,360	6,660	6,960
165,000	3,090	3,390	3,690	3,990	4,290	4,590	4,890	5,190	5,490	5,790	6,090	6,390	6,690	6,990
170,000	3,120	3,420	3,720	4,020	4,320	4,620	4,920	5,220	5,520	5,820	6,120	6,420	6,720	7,020
175,000	3,150	3,450	3,750	4,050	4,350	4,650	4,950	5,250	5,550	5,850	6,150	6,450	6,750	7,050
180,000	3,180	3,480	3,780	4,080	4,380	4,680	4,980	5,280	5,580	5,880	6,180	6,480	6,780	7,080
185,000	3,210	3,510	3,810	4,110	4,410	4,710	5,010	5,310	5,610	5,910	6,210	6,510	6,810	7,110
190,000	3,240	3,540	3,840	4,140	4,440	4,740	5,040	5,340	5,640	5,940	6,240	6,540	6,840	7,140
195,000	3,270	3,570	3,870	4,170	4,470	4,770	5,070	5,370	5,670	5,970	6,270	6,570	6,870	7,170
200,000	3,300	3,600	3,900	4,200	4,500	4,800	5,100	5,400	5,700	6,000	6,300	6,600	6,900	7,200

Note:

(1) The Minimum Allowable CFM50 applies to units of all sizes.
This is the Cautionary Level and it is based on the ASHRAE minimum requirement of 300 CFM50 per occupant plus 6 CFM50 per 1,000 Btu/hr of open combustion appliance input rating.

7/7/92

MINIMUM VENTILATION REQUIREMENT [LBL = 23]

No. of Occupants (1)	Total Appliance(s) Input in Btu/hr (2)	Cautionary Level (3)	Minimum Allowable CFM50 Shell Leakage — Conditioned Living Area (4) (5)							
			1200 sqft or less	1300 sqft	1400 sqft	1500 sqft	1600 sqft	1800 sqft	2000 sqft	2200 sqft or more
2	0	690	1,288	1,395	1,503	1,610	1,717	1,932	2,147	2,361
2	20,000	810	1,288	1,395	1,503	1,610	1,717	1,932	2,147	2,361
2	40,000	930	1,288	1,395	1,503	1,610	1,717	1,932	2,147	2,361
2	60,000	1,050	1,288	1,395	1,503	1,610	1,717	1,932	2,147	2,361
2	80,000	1,170	1,288	1,395	1,503	1,610	1,717	1,932	2,147	2,361
2	100,000	1,290	1,290	1,395	1,503	1,610	1,717	1,932	2,147	2,361
2	120,000	1,410	1,410	1,410	1,503	1,610	1,717	1,932	2,147	2,361
2	140,000	1,530	1,530	1,530	1,530	1,610	1,717	1,932	2,147	2,361
3	0	1,035	1,288	1,395	1,503	1,610	1,717	1,932	2,147	2,361
3	20,000	1,155	1,288	1,395	1,503	1,610	1,717	1,932	2,147	2,361
3	40,000	1,275	1,288	1,395	1,503	1,610	1,717	1,932	2,147	2,361
3	60,000	1,395	1,395	1,395	1,503	1,610	1,717	1,932	2,147	2,361
3	80,000	1,515	1,515	1,515	1,515	1,610	1,717	1,932	2,147	2,361
3	100,000	1,635	1,635	1,635	1,635	1,635	1,717	1,932	2,147	2,361
3	120,000	1,755	1,755	1,755	1,755	1,755	1,755	1,932	2,147	2,361
3	140,000	1,875	1,875	1,875	1,875	1,875	1,875	1,932	2,147	2,361
4	0	1,380	1,380	1,395	1,503	1,610	1,717	1,932	2,147	2,361
4	20,000	1,500	1,500	1,500	1,503	1,610	1,717	1,932	2,147	2,361
4	40,000	1,620	1,620	1,620	1,620	1,620	1,717	1,932	2,147	2,361
4	60,000	1,740	1,740	1,740	1,740	1,740	1,740	1,932	2,147	2,361
4	80,000	1,860	1,860	1,860	1,860	1,860	1,860	1,932	2,147	2,361
4	100,000	1,980	1,980	1,980	1,980	1,980	1,980	1,980	2,147	2,361
4	120,000	2,100	2,100	2,100	2,100	2,100	2,100	2,100	2,147	2,361
4	140,000	2,220	2,220	2,220	2,220	2,220	2,220	2,220	2,220	2,361
5	0	1,725	1,725	1,725	1,725	1,725	1,725	1,932	2,147	2,361
5	20,000	1,845	1,845	1,845	1,845	1,845	1,845	1,932	2,147	2,361
5	40,000	1,965	1,965	1,965	1,965	1,965	1,965	1,965	2,147	2,361
5	60,000	2,085	2,085	2,085	2,085	2,085	2,085	2,085	2,147	2,361
5	80,000	2,205	2,205	2,205	2,205	2,205	2,205	2,205	2,205	2,361
5	100,000	2,325	2,325	2,325	2,325	2,325	2,325	2,325	2,325	2,361
5	120,000	2,445	2,445	2,445	2,445	2,445	2,445	2,445	2,445	2,445
5	140,000	2,565	2,565	2,565	2,565	2,565	2,565	2,565	2,565	2,565
6	0	2,070	2,070	2,070	2,070	2,070	2,070	2,070	2,147	2,361
6	20,000	2,190	2,190	2,190	2,190	2,190	2,190	2,190	2,190	2,361
6	40,000	2,310	2,310	2,310	2,310	2,310	2,310	2,310	2,310	2,361
6	60,000	2,430	2,430	2,430	2,430	2,430	2,430	2,430	2,430	2,430
6	80,000	2,550	2,550	2,550	2,550	2,550	2,550	2,550	2,550	2,550
6	100,000	2,670	2,670	2,670	2,670	2,670	2,670	2,670	2,670	2,670
6	120,000	2,790	2,790	2,790	2,790	2,790	2,790	2,790	2,790	2,790
6	140,000	2,910	2,910	2,910	2,910	2,910	2,910	2,910	2,910	2,910

Notes:

(1) A house pet may be considered an occupant. For more than 6 occupants, see back.

(2) Applies to all open combustion appliances in the conditioned space.
For Btu/hr ratings not listed, use the next higher rating or use 6 CFM50 for each 1,000 Btu/hr input.

(3) The Cautionary Level represents the absolute minimum CFM50 as prescribed by ASHRAE based upon 345 CFM50 per occupant plus 6 CFM50 per 1,000 Btu/hr of open combustion appliance input rating.

(4) For house sizes not listed, use column for next larger living area.

(5) Assumes 8' ceiling height. If the ceiling height is over 8', correct by multiplying CFM50 by the following factors: For 9' ceiling: 1.13; For 10' ceiling: 1.25; For 11' ceiling: 1.38; For 12' ceiling: 1.50.

7/7/92

MINIMUM VENTILATION REQUIREMENT [LBL = 23]

Total Appliance(s) Input in Btu/hr	Minimum Allowable CFM50 Shell Leakage													
	Number of Occupants in Dwelling (1)													
	7	8	9	10	11	12	13	14	15	16	17	18	19	20
0	2,415	2,760	3,105	3,450	3,795	4,140	4,485	4,830	5,175	5,520	5,865	6,210	6,555	6,900
10,000	2,475	2,820	3,165	3,510	3,855	4,200	4,545	4,890	5,235	5,580	5,925	6,270	6,615	6,960
15,000	2,505	2,850	3,195	3,540	3,885	4,230	4,575	4,920	5,265	5,610	5,955	6,300	6,645	6,990
20,000	2,535	2,880	3,225	3,570	3,915	4,260	4,605	4,950	5,295	5,640	5,985	6,330	6,675	7,020
25,000	2,565	2,910	3,255	3,600	3,945	4,290	4,635	4,980	5,325	5,670	6,015	6,360	6,705	7,050
30,000	2,595	2,940	3,285	3,630	3,975	4,320	4,665	5,010	5,355	5,700	6,045	6,390	6,735	7,080
35,000	2,625	2,970	3,315	3,660	4,005	4,350	4,695	5,040	5,385	5,730	6,075	6,420	6,765	7,110
40,000	2,655	3,000	3,345	3,690	4,035	4,380	4,725	5,070	5,415	5,760	6,105	6,450	6,795	7,140
45,000	2,685	3,030	3,375	3,720	4,065	4,410	4,755	5,100	5,445	5,790	6,135	6,480	6,825	7,170
50,000	2,715	3,060	3,405	3,750	4,095	4,440	4,785	5,130	5,475	5,820	6,165	6,510	6,855	7,200
55,000	2,745	3,090	3,435	3,780	4,125	4,470	4,815	5,160	5,505	5,850	6,195	6,540	6,885	7,230
60,000	2,775	3,120	3,465	3,810	4,155	4,500	4,845	5,190	5,535	5,880	6,225	6,570	6,915	7,260
65,000	2,805	3,150	3,495	3,840	4,185	4,530	4,875	5,220	5,565	5,910	6,255	6,600	6,945	7,290
70,000	2,835	3,180	3,525	3,870	4,215	4,560	4,905	5,250	5,595	5,940	6,285	6,630	6,975	7,320
75,000	2,865	3,210	3,555	3,900	4,245	4,590	4,935	5,280	5,625	5,970	6,315	6,660	7,005	7,350
80,000	2,895	3,240	3,585	3,930	4,275	4,620	4,965	5,310	5,655	6,000	6,345	6,690	7,035	7,380
85,000	2,925	3,270	3,615	3,960	4,305	4,650	4,995	5,340	5,685	6,030	6,375	6,720	7,065	7,410
90,000	2,955	3,300	3,645	3,990	4,335	4,680	5,025	5,370	5,715	6,060	6,405	6,750	7,095	7,440
95,000	2,985	3,330	3,675	4,020	4,365	4,710	5,055	5,400	5,745	6,090	6,435	6,780	7,125	7,470
100,000	3,015	3,360	3,705	4,050	4,395	4,740	5,085	5,430	5,775	6,120	6,465	6,810	7,155	7,500
105,000	3,045	3,390	3,735	4,080	4,425	4,770	5,115	5,460	5,805	6,150	6,495	6,840	7,185	7,530
110,000	3,075	3,420	3,765	4,110	4,455	4,800	5,145	5,490	5,835	6,180	6,525	6,870	7,215	7,560
115,000	3,105	3,450	3,795	4,140	4,485	4,830	5,175	5,520	5,865	6,210	6,555	6,900	7,245	7,590
120,000	3,135	3,480	3,825	4,170	4,515	4,860	5,205	5,550	5,895	6,240	6,585	6,930	7,275	7,620
125,000	3,165	3,510	3,855	4,200	4,545	4,890	5,235	5,580	5,925	6,270	6,615	6,960	7,305	7,650
130,000	3,195	3,540	3,885	4,230	4,575	4,920	5,265	5,610	5,955	6,300	6,645	6,990	7,335	7,680
135,000	3,225	3,570	3,915	4,260	4,605	4,950	5,295	5,640	5,985	6,330	6,675	7,020	7,365	7,710
140,000	3,255	3,600	3,945	4,290	4,635	4,980	5,325	5,670	6,015	6,360	6,705	7,050	7,395	7,740
145,000	3,285	3,630	3,975	4,320	4,665	5,010	5,355	5,700	6,045	6,390	6,735	7,080	7,425	7,770
150,000	3,315	3,660	4,005	4,350	4,695	5,040	5,385	5,730	6,075	6,420	6,765	7,110	7,455	7,800
155,000	3,345	3,690	4,035	4,380	4,725	5,070	5,415	5,760	6,105	6,450	6,795	7,140	7,485	7,830
160,000	3,375	3,720	4,065	4,410	4,755	5,100	5,445	5,790	6,135	6,480	6,825	7,170	7,515	7,860
165,000	3,405	3,750	4,095	4,440	4,785	5,130	5,475	5,820	6,165	6,510	6,855	7,200	7,545	7,890
170,000	3,435	3,780	4,125	4,470	4,815	5,160	5,505	5,850	6,195	6,540	6,885	7,230	7,575	7,920
175,000	3,465	3,810	4,155	4,500	4,845	5,190	5,535	5,880	6,225	6,570	6,915	7,260	7,605	7,950
180,000	3,495	3,840	4,185	4,530	4,875	5,220	5,565	5,910	6,255	6,600	6,945	7,290	7,635	7,980
185,000	3,525	3,870	4,215	4,560	4,905	5,250	5,595	5,940	6,285	6,630	6,975	7,320	7,665	8,010
190,000	3,555	3,900	4,245	4,590	4,935	5,280	5,625	5,970	6,315	6,660	7,005	7,350	7,695	8,040
195,000	3,585	3,930	4,275	4,620	4,965	5,310	5,655	6,000	6,345	6,690	7,035	7,380	7,725	8,070
200,000	3,615	3,960	4,305	4,650	4,995	5,340	5,685	6,030	6,375	6,720	7,065	7,410	7,755	8,100

Note:

(1) The Minimum Allowable CFM50 applies to units of all sizes.
This is the Cautionary Level and it is based on the ASHRAE minimum requirement of 345 CFM50 per occupant plus 6 CFM50 per 1,000 Btu/hr of open combustion appliance input rating.

7/7/92

APPENDIX -C-

Combustion Air Requirements For Fuel Burning Appliances

APPENDIX -C-

COMBUSTION AIR REQUIREMENTS FOR FUEL BURNING APPLIANCES

	APPLIANCES IN SPACES WITH 1200 CFM50 OF INFILTRATION OR MORE	APPLIANCES IN SPACES WITH LESS THAN 1200 CFM50 OR APPLIANCES IN SPACES WITH 1200 CFM50 OF INFILTRATION INFILTRATION AND INADEQUATE VOLUME		
		* ONE CEILING OPENING AND ONE FLOOR OPENING (1) OR * ONE CEILING OPENING AND ONE VERTICAL DUCT (2) OR * TWO OPENINGS IN AN EXTERIOR WALL (3) OR * TWO VERTICAL DUCTS (3)		TWO HORIZONTAL DUCTS (4) [multiply value by two to obtain total req'd Net Free Venting Area]
TOTAL INPUT	MINIMUM ROOM SIZE	TOTAL REQ'D NET FREE VENTING AREA	REQ'D NET FREE VENTING AREA PER VENT	REQ'D NET FREE VENTING AREA PER VENT
(Btu/hr)	(CU. FT.)	(SQ. IN.)	(SQ. IN.)	(SQ. IN.)
20,000	1,000	10	5	10
25,000	1,250	14	7	13
30,000	1,500	16	8	15
35,000	1,750	18	9	18
40,000	2,000	20	10	20
45,000	2,250	24	12	23
50,000	2,500	26	13	25
55,000	2,750	28	14	28
60,000	3,000	30	15	30
65,000	3,250	34	17	33
70,000	3,500	36	18	35
75,000	3,750	38	19	38
80,000	4,000	40	20	40
85,000	4,250	44	22	43
90,000	4,500	46	23	45
95,000	4,750	48	24	48
100,000	5,000	50	25	50
105,000	5,250	54	27	53
110,000	5,500	56	28	55
115,000	5,750	58	29	58
120,000	6,000	60	30	60
125,000	6,250	64	32	63
130,000	6,500	66	33	65
135,000	6,750	68	34	68
140,000	7,000	70	35	70
145,000	7,250	74	37	73
150,000	7,500	76	38	75
155,000	7,750	78	39	78
160,000	8,000	80	40	80
165,000	8,250	84	42	83
170,000	8,500	86	43	85

(1) Crawl space and attic must be vented.
(2) Vertical duct must extend from vented attic to within 12" of the floor. Attic must have at least 30" between rafter and roof joist at the highest point.
(3) Upper opening/vent shall be within 12" of the ceiling, lower opening shall be within 12" of the floor.
(4) Horizontal ducts must draw exterior air or from spaces freely communicating with the exterior.